WELLER

3000/4000 Series Ordering Questions

Vehicle Information?

Model Year _____ Make _____ VIN # ☐☐☐☐☐☐☐☐☐☐☐☐☐☐☐☐☐

Serial # _____ Part # _____ CIN # _____

Does This Transmission Have A PTO Provision?

☐ Yes ☐ No

What Type Of Electronic Controls Are Needed?

☐ Pre-Block (Pre-1996)

☐ TID 1/2/3 (1994-2005)

☐ GEN 4/5 (2005-Present)

Cooling Options?

☐ Front Cooler Ports

☐ Rear Cooler Ports

☐ Direct Mount Cooler

☐ 3.8 Cooler (Sold Seperately)

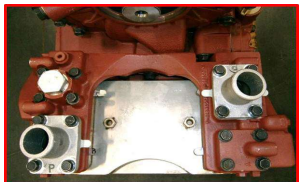

Does This Transmission Have A Retarder?

☐ Yes ☐ No

What Is The Output Configuration? (Select Bolt & Splines needed)

☐ 1 Bolt ☐ 2 Bolt

☐ Old Style Output (43 Spline Count) ☐ New Style Output (41 Spline Count)

2 Year Unlimited Mileage On-Highway Applications Nationwide

For additional assistance, please contact the Allison Sales Team at (616)724-3744 or allisoncountersales@wellertruck.com

©Jasper Weller, LLC

100% Associate Owned

DESCRIPTION	PART #
Transynd Fluid - 1 Gal.	27101CTCS
Transynd Fluid - 5 Gal.	27101CTPPL
Transynd Fluid - 55 Gal.	27101CTDR
Transynd Fluid - 275 Gal.	27101-TOTE

Filter Kits

AT 500 Series	
3.8" Pan -Filter Kit	29540976
5.3" Pan -Filter Kit	29538489
MT 600 Series	
Oil Filter kit	29538489
HT 700 Series	
4.5" Pan - Filter Kit	29530562
4.5" Pan w/ adaptor 23016883 & pan 23016884	29530563
6" Pan -Filter Kit	6839945
7" Pan -Filter Kit	29530564
8.5" Hyd. Oil Pan	23012407
8.5" Elec Oil Pan	29530565
1000/2000 Series	
Control Main	29539579
Magnet	29535617
Suction Shallow Pan O/H	29542833
Suction Shallow Pan O/H MY06 & older	29537965
Suction Deep Pan O/H	29542824
3000/4000 Series	
2" Pan Hi-capacity Kit	29548987
4" Pan Hi-capacity Kit	29548988
Ev 40/50	
Hi-capacity Kit	29545785

DESCRIPTION	PART#

NSBU Switches

2 Connector	29540479
1 Connector	29541852
Internal Mode Switch (Gen 4)	29542692

TRANSMISSION FLUID

DO YOU NEED TRANSMISSION FLUID WITH THAT?

- When selling an Allison locally we can also sell them the fluid!
- We carry both the one gallon jug and 5 gallon pail.

Mobil Delvac Synthetic

- 1 gallon - p/n **98HX54**
- 5 gallons – p/n **98HF29**

Unit	Pan/Sump	Capacity**
AT542 AT545	Shallow Deep	15 quarts 20 quarts
MT	4.3” 5.1”	12 quarts 15 quarts
HT	4.5” 6” or 7” 8.5”	30.5 quarts 33 quarts 37 quarts
1K2K	Shallow Deep	13 quarts 15 quarts
3K	2” 4”	26 quarts 29 quarts
4K	2” 4”	40 quarts 48 quarts

**All quantities exclude cooler, cooler lines and inline filters

WELLER

Revisions to this document are noted by a stripe in the left-hand margin

SUBJECT: Transmission Fluid/Filter Change Recommendations

MODELS AFFECTED: Allison Commercial On-Highway Products, AT 500 Series, MT 600 Series, HT 700 Series, 1000 and 2000 Series Transmissions, 9-Speed, 3000 Series™ Transmissions (includes B300/400 and T200/300), 4000 Series™ Transmissions (includes B500 and T400/500), TC10®, H 40/50 EP™ Products, eGen Flex™

Introduction:

Optimum performance and reliability of heavy-duty automatic transmissions can be noticeably influenced by the type of fluid and filter(s) used and the frequency with which those fluid and filter(s) are changed. Allison Transmission has designed extensive programs including specifications and tests to verify the quality of fluids and consequently have specific fluid and filter change recommendations. Due to field studies, changes in emission requirements, vehicle design, and operating environments, Allison Transmission has realigned recommended fluid and filter change intervals. Heavy-duty Automatic Transmission change intervals have been revised to more closely match today's operating environments.

Model Year 2009 and 2010 Prognostics:

Prognostics that monitor and maximize fluid and filter life were offered in Model Year 2009 for 1000, 2000, 3000, and 4000 Series Transmissions. 3000 and 4000 Series Transmissions began using Prognostics with serial numbers 6510822005 (3000), 6520099957 (3000), 6610257671 (4000), 6620007438 (4000). 1000 and 2000 Series Transmission Prognostics were first available in July of 2008 (MY2009). **MY2009 Allison Prognostics must only be used with Allison TES 668® and TES 295® Approved Fluid(s)**. January 2010 Allison Prognostics are compatible with Allison TES 668, TES 295 and TES 389® Approved Fluid(s) in 3000 and 4000 Series Transmissions starting with TCM calibration CIN 4C or later (4C-xxxxx-yyy-z) and all January 2010 1000 and 2000 Series Transmissions.

All 3000 and 4000 Series Transmissions utilizing Prognostics require the use of Genuine Allison High-Capacity filters. All 1000 and 2000 Series Transmissions utilizing Prognostics require the use of Genuine Allison Control Main Spin-On filter, P/N 29539579. 1000, 2000, 3000, and 4000 Series Transmissions may or may not have this feature "enabled" or turned ON. This option requires that the OEM provide the wiring necessary and the feature enabled in the TCM. Refer to the appropriate Operator's Manual for the methods of identifying if Prognostics is enabled.

Refer to Table 4 for Filter/Fluid Change Intervals/Fluid Capacities by Series.

Copyright © 2023 Allison Transmission, Inc. All Rights Reserved.

Fluids and Specifications:

Fluid types are defined by applicable performance specification. The following transmission fluid types are approved for use in Allison Commercial On-Highway transmission products.

Fluid Type	Recommended (Intended) Usage
TES 668 and TES 295 Fluids • See *allisontransmission.com* for a list of Allison TES 668 and TES 295 Approved Fluid(s)	• General or severe duty • Extended change interval (2) (required) • Extended Transmission Coverage (ETC) policy (required) • Prognostics (required) MY2009
TES 389 Fluids • Schedule One TES 389* • Military specification fluids (for use in Military Vehicles Only) (1) • See *allisontransmission.com* for a list of Allison TES 389 Approved Fluid(s)	• General or severe duty • Standard change interval (2) • Prognostics MY2010 (3)
(1) Military specification fluids are approved for use in Military Applications in 3000, 4000, AT, MT, and HT Series products only, and are strictly prohibited from use in 1000 and 2000 Series transmission products. (2) Fluid and filter change intervals are based on transmission model, vocation (duty cycle), and fluid type (see attached charts). NOTE: Fluid drain intervals are based on 100 percent fill with Allison approved fluids. Fluid change intervals may be adjusted based on fluid analysis and fleet data. Refer to Service Information Letter (SIL) 17-TR-96 for details. (3) Prognostics are available with Allison TES 668, TES 295 and TES 389 Approved Fluid(s) only.	

Local conditions, severity of operation or duty cycle may require more or less frequent fluid change intervals that differ from the published recommended fluid change intervals of Allison Transmission. Allison Transmission recommends that customers use fluid analysis as the primary method for determining fluid change intervals. In the absence of a fluid analysis program the fluid change intervals listed in the charts must be used.

For information concerning models not listed in this publication, please call the Allison Technical Assistance Center at 1-800-252-5283.

Refer to the latest revision of Allison publication number GN2055EN, “Technicians’ Guide to Automatic Transmission Fluid”, and SIL 17-TR-96 for additional information on oil analysis and general knowledge about transmission fluids.

Non-approved Fluids

DEXRON®-III and DEXRON®-VI fluids are no longer approved for use in Commercial On-Highway transmission products and have been removed from all Allison TES 389 Approved Fluid(s) lists. TES 228® (C4 type) fluids are no longer approved for use in Commercial On-Highway transmission products and have been removed from the Allison TES 389 Approved Fluid(s) list.

Allison Fluid and Filters for Extended Transmission Coverage (ETC)

Specified fluids and genuine Allison filters must be used to qualify for Extended Transmission Coverage. This coverage is forfeited when non-approved fluids and non-genuine filters are used.

Copyright © 2023 Allison Transmission, Inc. All Rights Reserved.

Transmission Fluid Mixture Guidelines

Transmissions with a mixture of TES 668 or TES 295 fluid and Allison TES 389 Approved Fluid(s) must follow fluid/filter change recommendations for Allison TES 389 Approved Fluid(s). Upon the second oil change, if the customer reinstalls TES 668 or TES 295, the fluid/filter change recommendations outlined in 100 percent Allison TES 668 or TES 295 Approved Fluid(s) must be followed.

Fluid Exchange Machines:

Fluid exchanging machines are not recommended or recognized due to variation and inconsistencies that may not guarantee removal of 100 percent of the used fluid.

3000 and 4000 Series, H 40/50 EP and eGen Flex Filters:

New Genuine Allison High Capacity filters were released into production beginning with:

6510670912 (3000) 6610205144 (4000) 7110001551) (H 40/50 EP and eGen Flex) 6520067342 (3000) 6620002521 (4000)

High-Capacity Filters:

Genuine Allison 3000 and 4000 Series, H 40/50 EP and eGen Flex high-capacity filters were released into production beginning July 2006. High-capacity filters allow extended filter change intervals when used with Allison TES 668 or TES 295 Approved Fluid(s). High-capacity service filters can be identified by P/N 29558294 or P/N 29558295 stamped into the filter end cap. Previous Allison 3000 and 4000 Series and H 40/50 EP filters can be identified by P/N 29538231 or P/N 29538232 stamped into the filter end cap.

Table 1. Filter Kits

Series	High-Capacity Filter Kit
3000 and 4000	29558328 (2 inch)
	29558329 (4 inch)
H 40/50 EP and eGen Flex	29545785

NOTE: Extended 3000 and 4000 Series transmissions Allison TES 668 or TES 295 Approved Fluid(s) and filter change intervals are only allowed with Genuine Allison high-capacity filters. Filters must be changed at or before recommended intervals.

Copyright © 2023 Allison Transmission, Inc. All Rights Reserved.

Initial Transmission Filter Change Schedule (Production/ReTran®)

*3000 and 4000 SeriesTransmissions — Main Filter 5000 miles (8000 km)/200 hours

*3000 and 4000 Series Transmission ReTran — Main Filter 5000 miles (8000 km)/200 hours

H 40/50 EP and eGen Flex Spin-On Control Main Filter 5000 miles (8000 km)/200 hours

AT Auxiliary Filter 5000 miles (8000 km)/200 hours

MT Auxiliary Filter 5000 miles (8000 km)/200 hours

*Not required beginning with S/N 6510670912, S/N 6610205144, S/N 6520067342, S/N 6620002521, and S/N 9320005689, S/N 9370006284, S/N 9420006679, S/N 9470005459

1000, 2000, 3000, and 4000 Series Hours vs. Miles Chart

Table 2 (2000/3000 Hour Based Maintenance) and Table 3 (4000/6000 Hour Based Maintenance) list the equivalent mileage based on the Allison recommended change intervals for Allison TES 668 or TES 295 Approved Fluid(s). For example, vocations or vehicles that operate with a high density shift cycle typically reach the 6000/3000 hour change limit **before** the recommended mileage limit.

An example could be a transit bus equipped with a B500R that operates an average of 7 mph (11 km/h). Recommended fluid/filter change interval for a B500R equipped with 2 inch control module in a transit vocation using a TES 668 or TES 295 fluid is 150,000 miles/240 000 km/6000 hours or 48 months whichever occurs first. Using Table 3 Hours vs. Miles, a vehicle operating at 7 mph (11 km/h) will travel approximately 42,000 miles (66 000 km) in 6000 hours. If an odometer is used to determine when to change the transmission fluid and filters, this specific vehicle would change the fluid every 42,000 miles (66 000 km) and filters every 21,000 miles (33 000 km).

Estimating average mph can be approximated by dividing total distance traveled in a typical day by the hours elapsed during that total distance. An example would be a vehicle that operates on average 96 miles (155 km) a day over an 8 hour period would average 12 mph (19 km/h).

Copyright © 2023 Allison Transmission, Inc. All Rights Reserved.

Table 2. 2000 and 3000 Hour Based Maintenance — Hours vs. Miles

2000 Hour Based Maintenance				3000 Hour Based Maintenance			
km/h Average	km Equivalent	MPH Average	miles Equivalent	km/h Average	km Equivalent	MPH Average	miles Equivalent
5	10000	3	6000	5	15000	3	9000
6	12000	4	8000	6	18000	4	12000
8	16000	5	1000	8	24000	5	15000
10	20000	6	12000	10	30000	6	18000
11	22000	7	14000	11	33000	7	21000
13	26000	8	16000	13	39000	8	24000
14	28000	9	18000	14	42000	9	27000
16	32000	10	20000	16	48000	10	30000
18	36000	11	22000	18	54000	11	33000
19	38000	12	24000	19	57000	12	36000
21	42000	13	26000	21	63000	13	39000
23	46000	14	28000	23	69000	14	42000
24	48000	15	30000	24	72000	15	45000
26	52000	16	32000	26	78000	16	48000
27	54000	17	34000	27	81000	17	51000
29	58000	18	36000	29	87000	18	54000
31	62000	19	38000	31	93000	19	57000
32	64000	20	40000	32	96000	20	60000
34	68000	21	42000	34	102000	21	63000
35	70000	22	44000	35	105000	22	66000
37	74000	23	46000	37	111000	23	69000
39	78000	24	48000	39	117000	24	72000
40	80000	25	50000	40	120000	25	75000

Copyright © 2023 Allison Transmission, Inc. All Rights Reserved.

Table 3. 4000 and 6000 Hour Based Maintenance — Hours vs. Miles

4000 Hour Based Maintenance				6000 Hour Based Maintenance			
km/h Average	km Equivalent	MPH Average	miles Equivalent	km/h Average	km Equivalent	MPH Average	miles Equivalent
5	20000	3	12000	5	30000	3	18000
6	24000	4	16000	6	36000	4	24000
8	32000	5	20000	8	48000	5	30000
10	40000	6	24000	10	60000	6	36000
11	44000	7	28000	11	66000	7	42000
13	52000	8	32000	13	78000	8	48000
14	56000	9	36000	14	84000	9	54000
16	64000	10	40000	16	96000	10	60000
18	72000	11	44000	18	108000	11	66000
19	76000	12	48000	19	114000	12	72000
21	84000	13	52000	21	126000	13	78000
23	92000	14	56000	23	138000	14	84000
24	96000	15	60000	24	144000	15	90000
26	104000	16	64000	26	156000	16	96000
27	108000	17	68000	27	162000	17	102000
29	116000	18	72000	29	174000	18	108000
31	124000	19	76000	31	186000	19	114000
32	128000	20	80000	32	192000	20	120000
34	136000	21	84000	34	204000	21	126000
35	140000	22	88000	35	210000	22	132000
37	148000	23	92000	37	222000	23	138000
39	156000	24	96000	39	234000	24	144000
40	160000	25	100000	40	240000	25	150000

Copyright © 2023 Allison Transmission, Inc. All Rights Reserved.

Table 4. Filter/Fluid Change Intervals/Fluid Capacities

1000 and 2000 Series	Filter	Change Intervals	Refer to Appendix A
		Filter Types and Part Numbers	Refer to Appendix A
	Fluid	Change Intervals	Refer to Appendix A
		Fluid Capacity	Refer to Appendix A
9-Speed	Filter	Change Intervals	Refer to Appendix B
		Filter Types and Part Numbers	Refer to Appendix B
	Fluid	Change Intervals	Refer to Appendix B
		Fluid Capacity	Refer to Appendix B
3000 and 4000 Series	Filter	Change Intervals	Refer to Appendix C
		Filter and Gasket Kits	Refer to Appendix C
	Fluid	Change Intervals	Refer to Appendix C
		Fluid Capacity	Refer to Appendix C
		Additional Fill for Allison Coolers/Accumulators	Refer to Appendix C
TC10	Filter	Change Intervals	Refer to Appendix D
		Filter and Gasket Kits	Refer to Appendix D
	Fluid	Change Intervals	Refer to Appendix D
		Fluid Capacity	Refer to Appendix D
H 40/50 EP and eGen Flex	Filter	Change Intervals	Refer to Appendix E
		Filter and Gasket Kits	Refer to Appendix E
	Fluid	Change Intervals	Refer to Appendix E
		Fluid Capacity	Refer to Appendix E
AT 500 Series	Filter	Change Intervals	Refer to Appendix F
		Filter and Gasket Kits	Refer to Appendix F
	Fluid	Change Intervals	Refer to Appendix F
		Fluid Capacity	Refer to Appendix F
MT 600 Series	Filter	Change Intervals	Refer to Appendix G
		Filter and Gasket Kits	Refer to Appendix G
	Fluid	Change Intervals	Refer to Appendix G
		Fluid Capacity	Refer to Appendix G
HT 700 Series	Filter	Change Intervals	Refer to Appendix H
		Filter and Gasket Kits	Refer to Appendix H
	Fluid	Change Intervals	Refer to Appendix H
		Fluid Capacity	Refer to Appendix H

Copyright © 2023 Allison Transmission, Inc. All Rights Reserved.

Appendix A. 1000/2000 Filter Change/Fluid Change Intervals

Table 5. Recommended Filter Change/Fluid Intervals

NOTE: Refer to Table 6 for Filter Type/Part Number Information and Table 7 for Fluid Capacity Information.

NOTE: Change fluid and filters at or before recommended mileage, months, or hours have elapsed, whichever occurs first.

NOTE: Local conditions, severity of operation or duty cycle may require more or less frequent fluid change intervals that differ from the published recommended fluid change intervals of Allison Transmission. Allison Transmission recommends that customers use fluid analysis as the primary method for determining fluid change intervals. In the absence of a fluid analysis program the fluid change intervals listed in the charts should be used.

1000 and 2000 Series Fluid And Filter Change Interval Recommendations						
			Prognostics Turned Off or Not Calibrated in TCM		Prognostics Turned On	
		Duty Cycle	Allison TES 668 and/orTES 295 Approved Fluid(s)	Allison TES 389 Approved Fluid(s)	Allison TES 668 and/or TES 295 Approved Fluid(s)	Allison TES 389 Approved Fluid(s)
Fluid		General*	150,000 Miles (240,000 km) 4,000 Hours 48 Months	50,000 Miles (80,000 km) 2,000 Hours 24 Months	When indicated by controller or 48 months, whichever occurs first	When indicated by controller or 24 months, whichever occurs first (MY2010)
		Severe**	75,000 Miles (120,000 km) 3,000 Hours 36 Months	12,000 Miles (20,000 km) 500 Hours 6 Months		
Filters	Spin-On Control Main Filter	General*	50,000 Miles (80,000 km) 2,000 Hours 24 Months	50,000 Miles (80,000 km) 2,000 Hours 24 Months	When indicated by controller or 48 months, whichever occurs first	When indicated by controller or 24 months, whichever occurs first (MY2010)
		Severe**	50,000 Miles (80,000 km) 2,000 Hours 24 Months	12,000 Miles (20,000 km) 500 Hours 6 Months		
	Internal Filter	All	Overhaul	Overhaul	Overhaul	Overhaul

See *allisontransmission.com/parts-service/approved-fluids* for a list of Allison Approved transmission fluids.

NOTE: TES 389 cannot be used in MY09.

NOTE: Anything other than 100 percent concentration of Allison TES 668 and/or TES 295 Approved Fluid(s) is considered a mixture and should utilize TES 389 change intervals. Also, mixtures shall not be used with Prognostics.

* General Vocation: All vocations not classified as Severe
** Severe Vocation: On/Off Highway, Refuse, City Transit, Shuttle Transit

Copyright © 2023 Allison Transmission, Inc. All Rights Reserved.

Table 6. Filter Type/Part Number

1000 and 2000 Series Filters	
Filter Type	**Part Number**
Control Main	29539579
Pan Suction (Shallow)*	29542833, 29537965**
Pan Suction (Deep)*	29542824

* Overhaul Only
** See SIL 12-1K2K-10, Interchangeability of the Shallow Sump Filters

Table 7. Fluid Capacity

NOTE: Approximate Fluid Loss for Control Main Filter (Spin-On) = 0.47 liters (1 pint)

1000 and 2000 Series Capacities (Approximate) *		
Sump Type	Initial Fill**	Refill**
	Liters (Quarts)	Liters (Quarts)
Standard	14 (14.8)	10 (10.6)
Shallow	12 (12.7)	7 (7.4)

* Fluid fill capacity is dependent on vehicle configuration. Final fluid capacity must be determined by dipstick level (see Mechanic's Tips MT3190EN, MT4007EN Section 1 or your Operator's Manual under "Care and Maintenance".
** Approximate quantities, do not include external lines, cooler, and hoses.

Copyright © 2023 Allison Transmission, Inc. All Rights Reserved.

Appendix B. 9-Speed Filter Change/Fluid Change Intervals

Table 8. Recommended Filter Change/Fluid Intervals

NOTE: Refer to Table 9 for Filter Type/Part Number Information and Table 10 for Fluid Capacity Information.

NOTE: Change fluid and filters at or before recommended mileage, months, or hours have elapsed, whichever occurs first.

NOTE: Local conditions, severity of operation or duty cycle may require more or less frequent fluid change intervals that differ from the published recommended fluid change intervals of Allison Transmission. Allison Transmission recommends that customers use fluid analysis as the primary method for determining fluid change intervals. In the absence of a fluid analysis program the fluid change intervals listed in the charts should be used.

9-Speed Fluid And Filter Change Interval Recommendations				
			Prognostics Turned Off or Not Calibrated in TCM	**Prognostics Turned On**
		Duty Cycle	**Allison TES 668 and/or TES 295 Approved Fluid(s)**	**Allison TES 668 and/or TES 295 Approved Fluid(s)**
Fluid		General*	150,000 Miles (240,000 km) 4,000 Hours 48 Months	When indicated by controller or 48 months, whichever occurs first
		Severe**	75,000 Miles (120,000 km) 3,000 Hours 36 Months	
Filters	**Spin-On Control Main Filter**	General*	50,000 Miles (80,000 km) 2,000 Hours 24 Months	When indicated by controller or 48 months, whichever occurs first
		Severe**	50,000 Miles (80,000 km) 2,000 Hours 24 Months	
	Internal Filter	All	Overhaul	Overhaul
See *allisontransmission.com/parts-service/approved-fluids* for a list of Allison Approved transmission fluids.				
* General Vocation: All vocations not classified as Severe ** Severe Vocation: On/Off Highway, City Transit, Shuttle Transit				

Table 9. Filter Type/Part Number

9-Speed Filters	
Filter Type	**Part Number**
Control Main	29539579
Suction Filter Assembly (Pan) *	29569044
*Suction Filter Includes One Pickup Tube Seal	

Copyright © 2023 Allison Transmission, Inc. All Rights Reserved.

Table 10. Fluid Capacity

9-Speed Capacities (Approximate) *		
Sump Type	Initial Fill**	Refill**
	Liters (Quarts)	Liters (Quarts)
Shallow	15.0 (15.9)	7.6 (8.0)

* Fluid fill capacity is dependent on vehicle configuration. Final fluid capacity must be determined by dipstick level (see Mechanic's Tips MT8890EN Section 1 or Operator's Manual OM8888EN under "Care and Maintenance".
** Approximate quantities, do not include external lines, cooler, and hoses.

Copyright © 2023 Allison Transmission, Inc. All Rights Reserved.

Appendix C. 3000/4000 Filter Change/Fluid Change Intervals

Table 11. Recommended Filter Change/Fluid Change Intervals

NOTE: Refer to Table 13 for Filter and Gasket Kit Information, Table 14 for Fluid Capacity Information, Table 15 for Additional Fill for Allison Coolers/Accumulators, and Figure 1 for Drain Plug Location, Filter Locations, and Control Module Dimensions.

NOTE: Change fluid and filters at or before recommended mileage, months, or hours have elapsed, whichever occurs first.

NOTE: Local conditions, severity of operation or duty cycle may require more or less frequent fluid change intervals that differ from the published recommended fluid change intervals of Allison Transmission. Allison Transmission recommends that customers use fluid analysis as the primary method for determining fluid change intervals. In the absence of a fluid analysis program the fluid change intervals listed in the charts should be used.

3000 and 4000 Series Fluid And Filter Change Interval Recommendations					
		Prognostics Turned Off or Not Calibrated in TCM		Prognostics Turned On	
	Duty Cycle	Allison TES 668 and/or TES 295 Approved Fluid(s)	Allison TES 389 Approved Fluid(s)	Allison TES 668 and/or TES 295 Approved Fluid(s)	Allison TES 389 Approved Fluid(s)
Fluid	General*	300,000 Miles (480,000 km) 6,000 Hours 48 Months	25,000 Miles (40,000 km) 1,000 Hours 12 Months	When indicated by controller or 60 months, whichever occurs first	When indicated by controller or 24 months, whichever occurs first
	Severe**	150,000 Miles (240,000 km) 6,000 Hours 48 Months	12,000 Miles (20,000 km) 500 Hours 6 Months		
See *allisontransmission.com/parts-service/approved-fluids* for a list of Allison Approved transmission fluids. * General Vocation: All vocations not classified as Severe ** Severe Vocation: On/Off Highway, Refuse, City Transit, Shuttle Transit					

Copyright © 2023 Allison Transmission, Inc. All Rights Reserved.

Table 11. Recommended Filter Change/Fluid Change Intervals *(cont'd)*

3000 and 4000 Series Fluid And Filter Change Interval Recommendations						
			Prognostics Turned Off or Not Calibrated in TCM		Prognostics Turned On	
		Duty Cycle	Allison TES 668 and/or TES 295 Approved Fluid(s)	Allison TES 389 Approved Fluid(s)	Allison TES 668 and/or TES 295 Approved Fluid(s)	Allison TES 389 Approved Fluid(s)
Filters	Main Filter	General*	75,000 Miles (120,000 km) 3,000 Hours 36 Months	25,000 Miles (40,000 km) 1,000 Hours 12 Months	When indicated by controller or 60 months, whichever occurs first	When indicated by controller or 24 months, whichever occurs first
		Severe**	75,000 Miles (120,000 km) 3,000 Hours 36 Months	12,000 Miles (20,000 km) 500 Hours 6 Months		
	Internal Filter	All	Overhaul	Overhaul	Overhaul	Overhaul
	Lube/ Auxiliary Filter	General*	75,000 Miles (120,000 km) 3,000 Hours 36 Months	25,000 Miles (40,000 km) 1,000 Hours 12 Months	When indicated by controller or 60 months, whichever occurs first	When indicated by controller or 24months, whichever occurs first
		Severe**	75,000 Miles (120,000 km) 3,000 Hours 36 Months	12,000 Miles (20,000 km) 500 Hours 6 Months		

NOTE: TES 389 cannot be used in MY09.

NOTE: Anything other than 100 percent concentration of Allison TES 668 and/or TES 295 Approved Fluids(s) is considered a mixture and should utilize TES 389 change intervals. Also, mixtures shall not be used with Prognostics.

* General Vocation: All vocations not classified as Severe
** Severe Vocation: On/Off Highway, Refuse, City Transit, Shuttle Transit

Copyright © 2023 Allison Transmission, Inc. All Rights Reserved.

Table 12. Recommended Filter Change/Fluid Change Intervals — MIL-PRF-2104, MIL-PRF-21260, MIL-PRF-32626, MIL-PRF-46167

NOTE: Change filters/fluid at or before recommended mileage, months, or hours have elapsed, whichever occurs first.

NOTE: Local conditions, severity of operation or duty cycle may require more or less frequent fluid change intervals that differ from the published recommended fluid change intervals of Allison Transmission. Allison Transmission recommends that customers use fluid analysis as the primary method for determining fluid change intervals. In the absence of a fluid analysis program the fluid change intervals listed in the charts should be used.

Filter Change/Fluid Change Intervals — MIL-PRF-2104, MIL-PRF-21260, MIL-PRF-32626, MIL-PRF-46167	
PRIOR TO HIGH-CAPACITY FILTERS or W/ HIGH-CAPACITY FILTERS* WITH PROGNOSTICS TURNED "OFF" OR NOT CALIBRATED IN TCM	
General**	**Severe*****
25,000 miles (40 000 km) 1000 hours 12 months	12,000 miles (20 000 km) 500 hours 6 months

* High-Capacity Filters released in models starting with S/N 6510670912, S/N 6520067342 (3000 Series) and S/N 6610205144, S/N 66200002521 (4000 Series)
** General Vocation: Intercity Coach with duty cycle less than or equal to one (1) stop per mile and all other vocations not listed in severe vocation.
*** Severe Vocation: All Retarders, On/Off Highway, Refuse, Transit, Shuttle Transit, and Intercity Coach with duty cycle greater than one (1) stop per mile.

Table 13. Filter and Gasket Kits

NOTE: Refer to Figure 1 for Filter Locations, and Control Module Dimensions.

3000 and 4000 Series Filter and Gasket Kits	
Kit Description	**Filter (High-Capacity)**
Filter Kit, 4" Service Filters for 2" or 7" sump	29558328
Filter Kit, 6" Service Filters for 4" sump	29558329

NOTE: Square cut filter cover O-rings P/N 29501469 are no longer included in High-Capacity Filter Kits P/N 29558328 and P/N 29558329. When servicing former filter covers P/N 29507434, the required square cut filter cover O-rings must be ordered separately. Square cut filter cover O-rings were originally used in transmissions manufactured prior to January 22, 1996, prior to 3000 Series . S/N 6510069120 or 4000 Series S/N 6610009730. Former filter covers can be identified by the part number cast on the exterior side of the filter cover. Any 3000 and 4000 Series transmissions with the former filter cover requires one square cut filter cover O-ring (4) and one O-ring (5) (refer to Figure 1) per filter cover. O-ring (5) is included in the aforementioned high-capacity filter kits. Some remanufactured transmissions may require the use of square cut O-rings if equipped with the former filter covers.

Copyright © 2023 Allison Transmission, Inc. All Rights Reserved.

Table 14. Fluid Capacity

3000 and 4000 Series Fluid Capacities (Approximate)*			
Transmissions Fluid Loss — Filter Change Only: Main Filter = 1.9 liters (2 quarts) Lube Filter = 7.6 liters (8 quarts)			
Model	Sump	Initial Fill**	Refill**
		Liters (Quarts)	Liters (Quarts)
3000	4 inch	27 (29)	18 (19)
3000	2 inch	25 (26)	16 (17)
4000	4 inch***	45 (48)	37 (39)
4000	2 inch***	38 (40)	30 (31)

* Fluid fill capacity is dependent on vehicle configuration. Final fluid capacity must be determined by dipstick level (see Mechanic's Tips MT3004EN Section 1 or your Operator's Manual under "Care and Maintenance".
** Approximate quantities, do not include external lines, cooler, and hose
*** Add 2.8 Liters (3 Quarts) for Transmissions with PTO

Table 15. Additional Fill for Allison Coolers/Accumulators

3000 and 4000 Series Additional Fill for Allison Coolers/Accumulators		
Product Family	**Cooler Type**	**Liters (Quarts)**
3000/4000	Non-Retarder Direct Mount	1.0 (1.1)
3000/4000	Remote/Retarder/Sump	2.5 (2.6)
3000	Retarder Accumulator	1.2 (1.3)
4000	Direct Mount/Retarder	2.1 (2.2)
4000	Retarder Accumulator	0.6 (0.6)

Copyright © 2023 Allison Transmission, Inc. All Rights Reserved.

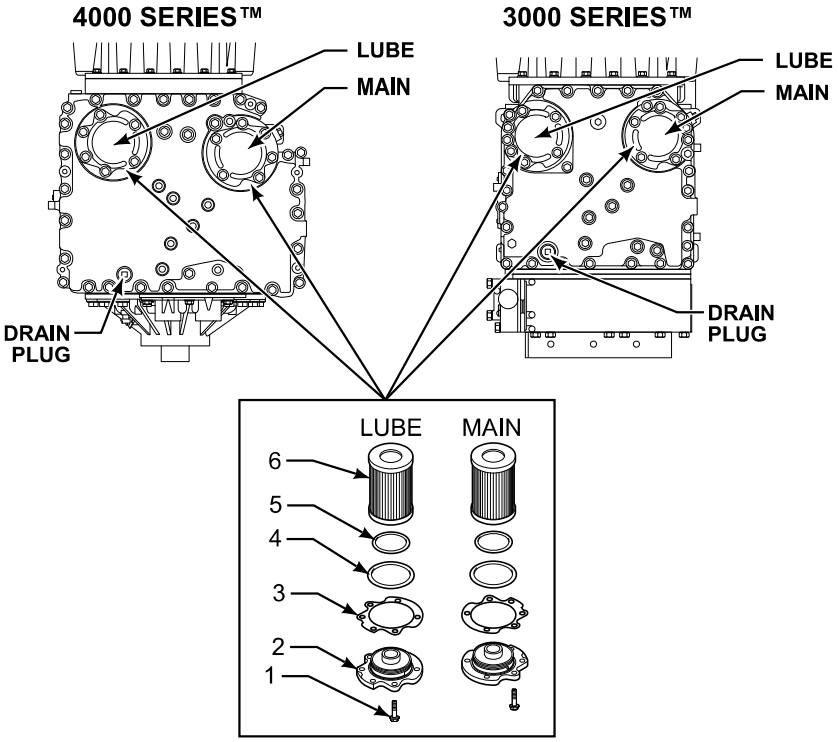

NOTE: Torque all filter cover retaining bolts to 51-61 N•m (38-45 lb ft)
NOTE: Main and Lube Filter designations cast into bottom of Control Module
NOTE: O-Ring #4 is no longer included in high capacity filter kits.

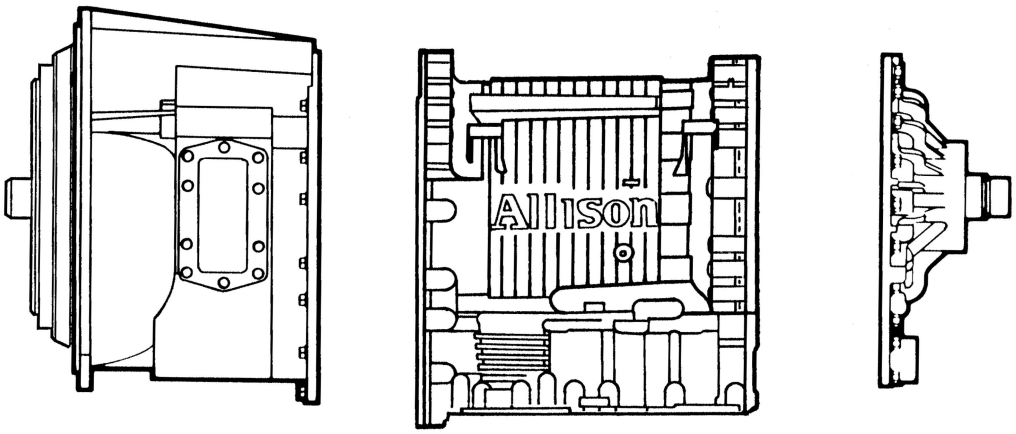

* 4 inch Control Module Measures 3.5 inch approximately
2 inch Control Module Measures 1.75 inch approximately

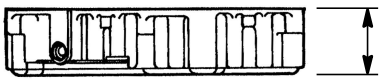

5308987

Figure 1. Drain Plug/Filter Location and Control Module Dimensions

Copyright © 2023 Allison Transmission, Inc. All Rights Reserved.

Appendix D. TC10 Filter Change/Fluid Change Intervals

Table 16. Recommended Filter Change/Fluid Change Intervals

NOTE: Refer to Table 17 for Filter and Gasket Kit Information, Table 18 for Fluid Capacity Information, and Figure 2 for Drain Plug and Filter Locations.

NOTE: Change fluid and filters at or before recommended mileage, months, or hours have elapsed, whichever occurs first.

NOTE: Local conditions, severity of operation or duty cycle may require more or less frequent fluid change intervals that differ from the published recommended fluid change intervals of Allison Transmission. Allison Transmission recommends that customers use fluid analysis as the primary method for determining fluid change intervals. In the absence of a fluid analysis program the fluid change intervals listed in the charts should be used.

TC10 Tractor Series Fluid And Filter Change Interval Recommendations				
			Prognostics Turned Off or Not Calibrated in TCM	**Prognostics Turned On**
		Duty Cycle	**Allison TES 668 and/or TES 295 Approved Fluid***	**Allison TES 668 and/or TES 295 Approved Fluid***
Fluid		General	500,000 Miles (804,700 km) 20,000 Hours 60 Months	When indicated by controller or 60 months, whichever occurs first
FIters	**Internal Filter**	General	Overhaul	Overhaul
	Lube/ Auxiliary Filter	General	500,000 Miles (804,700 km) 20,000 Hours 60 Months	When indicated by controller or 60 months, whichever occurs first
See *allisontransmission.com/parts-service/approved-fluids* for a list of Allison Approved transmission fluids.				
* 100 percent concentration of Allison TES 668 and/or TES 295 Approved Fluids and Allison Genuine Filters are required.				

Table 17. Filter and Gasket Kits

NOTE: Refer to Figure 2 for Filter Location.

TC10 Filter and Gasket Kits	
Description	**Part Number**
Kit - Oil Filter	29554653
Oil Filter*	29558295
O-Ring, Cover*	29554650
Seal, Drain Plug*	24205123
Instruction Sheet # 350*	29554750
Internal Suction Filter**	29551998
* Included in the Oil Filter Kit ** Overhaul Only	

Copyright © 2023 Allison Transmission, Inc. All Rights Reserved.

Table 18. Fluid Capacity

TC10 Capacities (Approximate) *		
Model	Initial Fill **	Refill **
	Liters (Quarts)	Liters (Quarts)
TC10	49 (52)	38 (40)

* Fluid fill capacity is dependent on vehicle configuration. Final fluid capacity must be determined by dipstick level (refer to Mechanic's Tips MT7119EN Section 2 or your Operator's Manual OM7118EN under "Care and Maintenance").
** Approximate quantities, do not include external circuits.

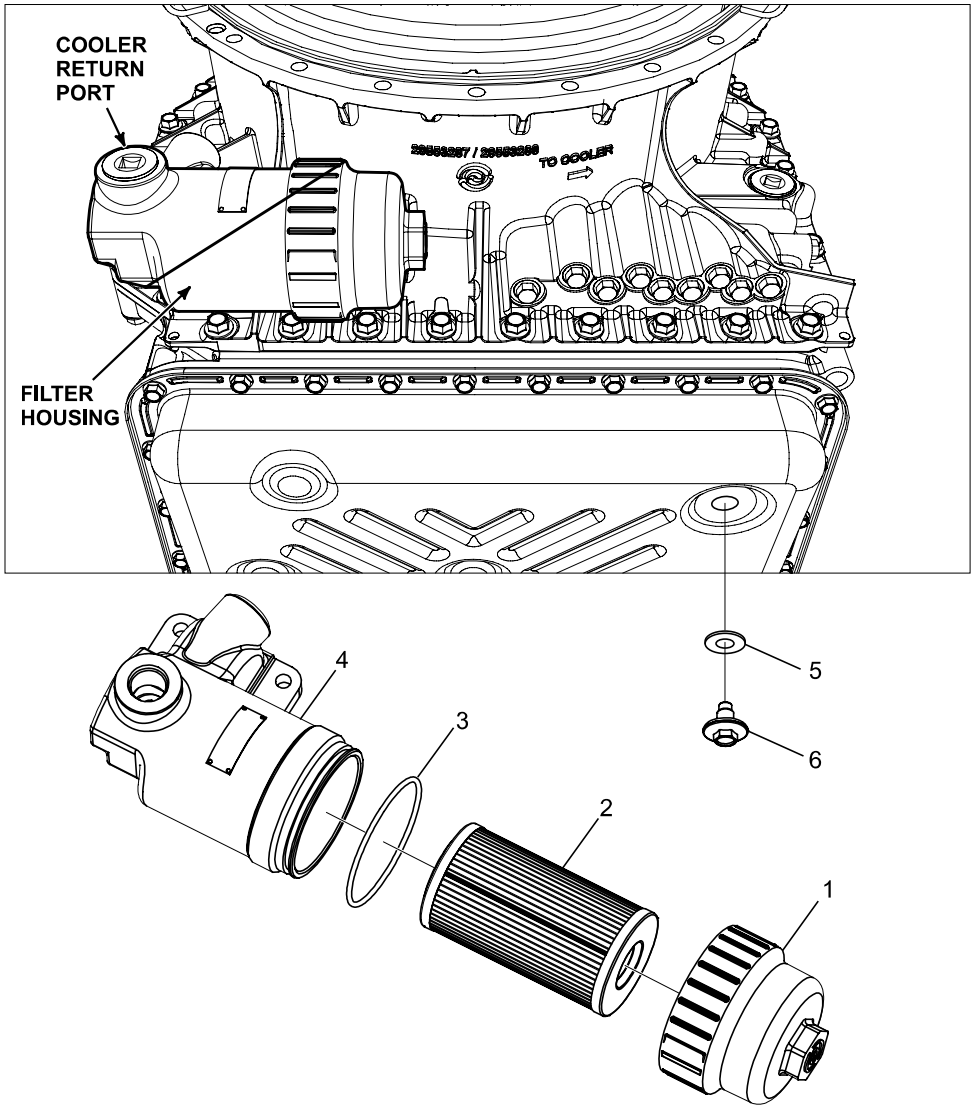

Figure 2. Drain Plug and Filter Locations

Copyright © 2023 Allison Transmission, Inc. All Rights Reserved.

Appendix E. H 40/50 EP and eGen Flex Filter Change/Fluid Change Intervals

Table 19. Recommended Filter Change/Fluid Change Intervals

NOTE: Both H 40/50 EP and eGen Flex Drive Units utilize TES 668 fluid. H 40/50 EP Drive Units previously used TES 468 fluid until July 2021.

NOTE: Change filters/fluid at or before recommended mileage or months have elapsed, whichever occurs first.

NOTE: H 40/50 EP and eGen Flex Drive Unit Lube Filter extended time change intervals are only valid with the use of Allison Transmission High-Capacity filters. High-Capacity filters implemented into production starting with S/N 7110001551.

NOTE: Local conditions, severity of operation or duty cycle may require more or less frequent fluid change intervals that differ from the published recommended fluid change intervals of Allison Transmission. Allison Transmission recommends that customers use fluid analysis as the primary method for determining fluid change intervals. In the absence of a fluid analysis program the fluid change intervals listed in the charts should be used.

H 40/50 EP and eGen Flex Fluid And Filter Change Interval Recommendations			
		Duty Cycle	**Allison TES 668 and/or TES 295 Approved Fluid(s)***
Fluid		General	100,000 Miles (160,000 km) or 48 Months
Flters	**Control Main Filter**	Intial	5,000 Miles (8,000 km) or 200 Hours
		After Intial	50,000 Miles (80,000 km) or 24 Months
	Lube Filter	High Capacity	100,000 Miles (160,000 km) or 48 Months
	Sump/Internal Filter	General	Overhaul
See *allisontransmission.com/parts-service/approved-fluids* for a list of Allison Approved transmission fluids.			
*100 Percent Concentration of Allison TES 668 and/or TES 295 Approved Fluid(s) and Allison Genuine Filters are required.			

Table 20. Filter and Gasket Kits

NOTE: Refer to Figure 3 for Drain Plug and Filter Locations.

H 40/50 EP and eGen Flex Filter and Gasket Kits	
Description	**Part Number**
Lube Filter and Gasket Kit	29545785
Control Main Filter	29539579

Copyright © 2023 Allison Transmission, Inc. All Rights Reserved.

Table 21. Fluid Capacity

NOTE: Refer to Figure 3 for Drain Plug and Filter Locations.

H 40/50 EP and eGen Flex Capacities (Approximate) *	
Transmissions Fluid Loss — Filter Change Only: Control Main filter = 0.94 liters (1 quart) Lube Filter = 2.84 liters (3 quarts)	
Model	Refill
	Liters (Quarts)
H 40/50 EP Drive Unit	15.1 (16)**
eGen Flex Drive Unit	15.1 (16)***

* Fluid fill capacity is dependent on vehicle configuration.
** Approximate quantities, do not include DPIM, cooler, and external lines.
*** Approximate quantities, do not include cooler or external lines.

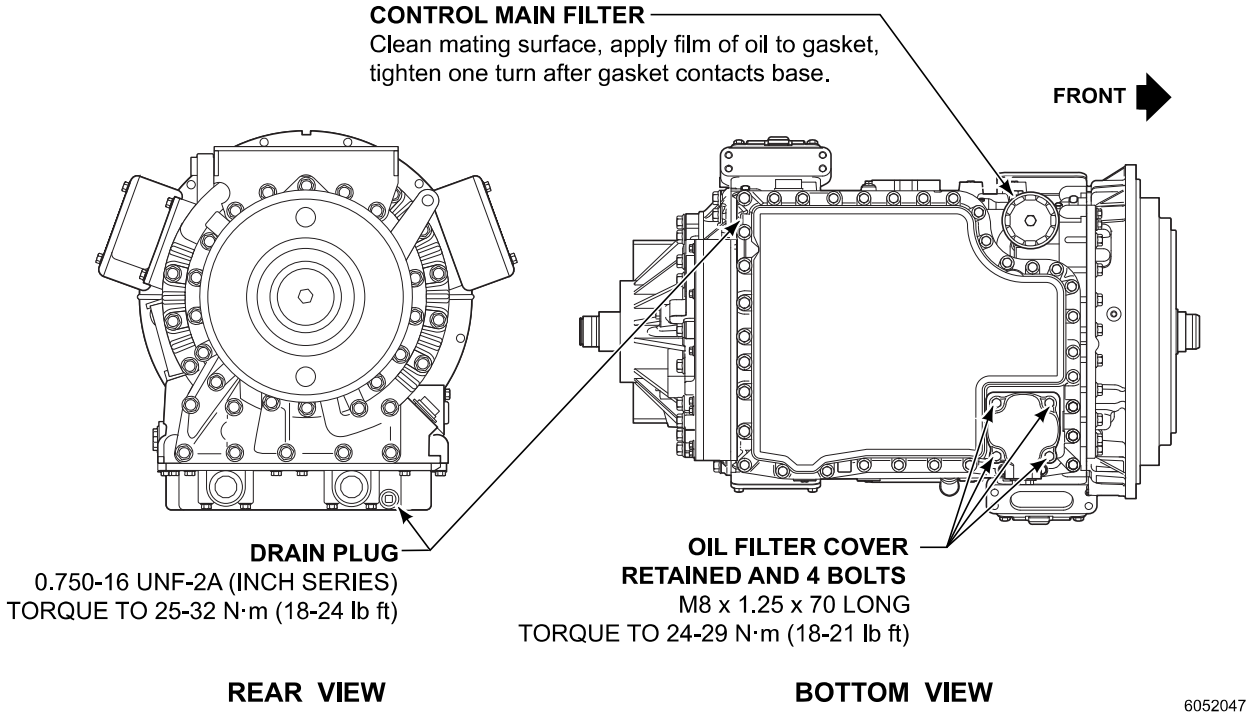

Figure 3. H 40/50 EP and eGen Flex Drain Plug and Filter Locations

Copyright © 2023 Allison Transmission, Inc. All Rights Reserved.

Appendix F. AT 500 Series Filter Change/Fluid Change Intervals

Table 22. Recommended Filter Change Intervals

NOTE: Refer to Table 23 for Fluid Change Intervals, Table 24 for Filter and Gasket Kit Information and Table 25 for Fluid Capacity Information.

NOTE: Change filters at or before recommended mileage, months, or hours have elapsed, whichever occurs first.

<table>
<tr><th colspan="8">AT 500 Filter Change Intervals</th></tr>
<tr><th colspan="4">100 Percent Concentration Allison TES 668 and/or TES 295 Approved Fluid(s)*</th><th colspan="4">Allison TES 389 Approved Fluid(s)*</th></tr>
<tr><th colspan="2">Internal Filter</th><th colspan="2">Lube/Auxiliary Filter</th><th colspan="2">Internal Filter</th><th colspan="2">Lube/Auxiliary Filter</th></tr>
<tr><td>General***</td><td>Severe****</td><td colspan="2">Initial
5000 Miles (8000 km)
200 Hours</td><td>General***</td><td>Severe****</td><td colspan="2">Initial
5000 Miles (8000 km)
200 Hours</td></tr>
<tr><td colspan="2">Polyester Filter**</td><td>General***†</td><td>Severe****†</td><td colspan="2">Polyester Filter**</td><td>General***†</td><td>Severe****†</td></tr>
<tr><td>Overhaul</td><td>Overhaul</td><td rowspan="3">50,000 Miles
(80 000 km)
2000 Hours
24 Months</td><td rowspan="3">25,000 Miles
(40 000 km)
1000 Hours
12 Months</td><td>Overhaul</td><td>Overhaul</td><td rowspan="3">25,000 Miles
(40 000 km)
1000 Hours
12 Months</td><td rowspan="3">12,000 Miles
(20 000 km)
500 Hours
6 Months</td></tr>
<tr><td colspan="2">Wire Mesh Filter</td><td colspan="2">Wire Mesh Filter</td></tr>
<tr><td>100,000 Miles
(160 000 km)
4000 Hours
48 Months</td><td>50,000 Miles
(80 000 km)
2000 Hours
24 Months</td><td>25,000 Miles
(40 000 km)
1000 Hours
12 Months</td><td>12,000 Miles
(20 000 km)
500 Hours
6 Months</td></tr>
<tr><td colspan="8">See allisontransmission.com/parts-service/approved-fluids for a list of Allison Approved transmission fluids.</td></tr>
<tr><td colspan="8">* Anything other than 100 percent concentration of Allison TES 668 and/or TES 295 Approved Fluid(s) is considered a mixture and should utilize Allison TES 389 Approved Fluid(s) change intervals.
*** General Vocation: less than one (1) stop per mile.
**** Severe Vocation: more than one (1) stop per mile.
** For additional information regarding the polyester internal filter see the latest revision of SIL 9-TR-01.
† When an Allison recommended high-efficiency filter is used, the change interval is not until the Change Filter light indicates the filter is contaminated or until it has been in use for 3 years, whichever occurs first. No mileage restrictions apply. High-efficiency filters are only approved for use with AT/MT/HT Series.</td></tr>
</table>

Copyright © 2023 Allison Transmission, Inc. All Rights Reserved.

Table 23. Recommended Fluid Change Intervals

NOTE: Refer to Table 22 for Filter Change Intervals, Table 24 for Filter and Gasket Kit Information and Table 25 for Fluid Capacity Information.

NOTE: Change fluid at or before recommended mileage, months, or hours have elapsed, whichever occurs first.

NOTE: Local conditions, severity of operation or duty cycle may require more or less frequent fluid change intervals that differ from the published recommended fluid change intervals of Allison Transmission. Allison Transmission recommends that customers use fluid analysis as the primary method for determining fluid change intervals. In the absence of a fluid analysis program the fluid change intervals listed in the charts should be used.

AT 500 Fluid Change Intervals			
100 Percent Concentration Allison TES 668 and/or TES 295 Approved Fluid(s)*		Allison TES 389 Approved Fluid(s)*	
General**	Severe***	General**	Severe***
100,000 Miles (160 000 km) 4000 Hours 48 Months	50,000 Miles (80 000 km) 2000 Hours 24 Months	25,000 Miles (40 000 km) 1000 Hours 12 Months	12,000 Miles (20 000 km) 500 Hours 6 Months
See *allisontransmission.com/parts-service/approved-fluids* for a list of Allison Approved transmission fluids.			
* Anything other than 100 percent concentration of Allison TES 668 and/or TES 295 Approved Fluid(s) is considered a mixture and should utilize Allison TES 389 Approved Fluid(s) change intervals. ** General Vocation: less than one (1) stop per mile. *** Severe Vocation: more than one (1) stop per mile.			

Table 24. Filter and Gasket Kits

NOTE: See the latest revision of SIL 9-TR-01 for additional information.

AT 500 Filter and Gasket Kits	
Pan	Oil Filter and Gasket Kit Part Number
97 mm (3.8 inch) oil pan	29540976
135 mm (5.3 inch) oil pan	29538489

Table 25. Fluid Capacity

AT 500 Capacities (Approximate)*	
Pan Depth	Initial Fill**
	Liters (Quarts)
97 mm (3.8 inch) oil pan	8.5 (9)
135 mm (5.3 inch) oil pan	15 (16)
* Fluid fill capacity is dependent on vehicle configuration. Final fluid capacity must be determined by dipstick level (see Mechanic's Tips MT1321EN Section 1 or your Operator's Manual under "Care and Maintenance" ** Approximate quantities, do not include external lines and cooler hose	

Copyright © 2023 Allison Transmission, Inc. All Rights Reserved.

Appendix G. MT 600 Series Filter Change/Fluid Change Intervals

Table 26. Recommended Filter Change Intervals

NOTE: Refer to Table 27 for Fluid Change Intervals, Table 28 for Filter and Gasket Kit Information, and Table 29 for Fluid Capacity Information.

NOTE: Change filters at or before recommended mileage, months, or hours have elapsed, whichever occurs first.

NOTE: Local conditions, severity of operation or duty cycle may require more or less frequent fluid change intervals that differ from the published recommended fluid change intervals of Allison Transmission. Allison Transmission recommends that customers use fluid analysis as the primary method for determining fluid change intervals. In the absence of a fluid analysis program the fluid change intervals listed in the charts should be used.

MT 600 Filter Change Intervals							
100 Percent Concentration Allison TES 668 and/or TES 295 Approved Fluid(s)*				**Allison TES 389 Approved Fluid(s) ***			
Internal Filter		**Lube/Auxiliary Filter**		**Internal Filter**		**Lube/Auxiliary Filter**	
General**	**Severe*****	**Initial** 5000 Miles (8000 km) 200 Hours		**General****	**Severe*****	**Initial** 5000 Miles (8000 km) 200 Hours	
Overhaul	Overhaul	**General**†**	**Severe***†**	Overhaul	Overhaul	**General**†**	**Severe***†**
		50,000 Miles (80 000 km) 2000 Hours 24 Months	25,000 Miles (40 000 km) 1000 Hours 12 Months			25,000 Miles (40 000 km) 1000 Hours 12 Months	12,000 Miles (20 000 km) 500 Hours 6 Months
See *allisontransmission.com/parts-service/approved-fluids* for a list of Allison Approved transmission fluids.							

* Anything other than 100 percent concentration of Allison TES 668 and/or TES 295 Approved Fluid(s) is considered a mixture and should utilize Allison TES 389 Approved Fluid(s) change intervals.
** General Vocation: less than one (1) stop per mile.
*** Severe Vocation: more than one (1) stop per mile.
† When an Allison recommended high-efficiency filter is used, the change interval is not until the Change Filter light indicates the filter is contaminated or until it has been in use for 3 years, whichever occurs first. No mileage restrictions apply. High-efficiency filters are only approved for use with AT/MT/HT Series.

Copyright © 2023 Allison Transmission, Inc. All Rights Reserved.

Table 27. Recommended Fluid Change Intervals

NOTE: Refer to Table 26 for Filter Change Intervals, Table 28 for Filter and Gasket Kit Information, and Table 29 for Fluid Capacity Information.

NOTE: Change fluid at or before recommended mileage, months, or hours have elapsed, whichever occurs first.

NOTE: Local conditions, severity of operation or duty cycle may require more or less frequent fluid change intervals that differ from the published recommended fluid change intervals of Allison Transmission. Allison Transmission recommends that customers use fluid analysis as the primary method for determining fluid change intervals. In the absence of a fluid analysis program the fluid change intervals listed in the charts should be used.

MT 600 Fluid Change Intervals			
100 Percent Concentration Allison TES 668 and/or TES 295* Approved Fluid(s)		Allison TES 389 Approved Fluid(s) *	
General**	Severe***	General**	Severe***
100,000 Miles (160 000 km) 4000 Hours 48 Months	50,000 Miles (80 000 km) 2000 Hours 24 Months	25,000 Miles (40 000 km) 1000 Hours 12 Months	12,000 Miles (20 000 km) 500 Hours 6 Months
See *allisontransmission.com/parts-service/approved-fluids* for a list of Allison Approved transmission fluids.			
* Anything other than 100 percent concentration of Allison TES 668 and/or TES 295 Approved Fluid(s) is considered a mixture and should utilize Allison TES 389 Approved Fluid(s) change intervals. ** General Vocation: less than one (1) stop per mile. ***Severe Vocation: more than one (1) stop per mile.			

Table 28. Filter and Gasket Kit

NOTE: See the latest revision of SIL 4-TR-01 for additional information.

MT 600 Filter and Gasket Kit
Oil Filter and Gasket Kit Part Number
29538489

Table 29. Fluid Capacity

MT 600 Capacities (Approximate) *	
Pan Depth	Initial Fill**
	Liters (Quarts)
110 mm (4.3 inch) oil pan	11 (12)
130 mm (5.1 inch) oil pan	14 (15)
* Fluid fill capacity is dependent on vehicle configuration. Final fluid capacity must be determined by dipstick level (see Mechanic's Tips MT1357EN Section 1 or your Operator's Manual under "Care and Maintenance" ** Approximate quantities, do not include external lines and cooler hose	

Copyright © 2023 Allison Transmission, Inc. All Rights Reserved.

Appendix H. HT 700 Series Filter Change/Fluid Change Intervals

Table 30. Recommended Filter Change Intervals

NOTE: Refer to Table 31 for Fluid Change Intervals, Table 32 for Filter and Gasket Kit Information, and Table 33 for Fluid Capacity Information.

NOTE: Change filters at or before recommended mileage, months, or hours have elapsed, whichever occurs first.

HT 700 Filter Change Intervals									
100 Percent Concentration Allison TES 668 and/or TES 295 Approved Fluid(s)*					**AllisonTES 389 Approved Fluid(s)***				
Main Filter		**Internal Filter**	**Lube/Auxiliary Filter**		**Main Filter**		**Internal Filter**	**Lube/Auxiliary Filter**	
General**	**Severe*****	Overhaul	**Initial** 5000 Miles (8000 km) 200 Hours		**General****	**Severe*****	Overhaul	**Initial** 5000 Miles (8000 km) 200 Hours	
50,000 Miles (80 000 km) 2000 Hours 24 Months	25,000 Miles (40 000 km) 1000 Hours 12 Months		**General**†**	**Severe***†**	25,000 Miles (40 000 km) 1000 Hours 12 Months	12,000 Miles (20 000 km) 500 Hours 6 Months		**General**†**	**Severe***†**
			50,000 Miles (80 000 km) 2000 Hours 24 Months	25,000 Miles (40 000 km) 1000 Hours 12 Months				25,000 Miles (40 000 km) 1000 Hours 12 Months	12,000 Miles (20 000 km) 500 Hours 6 Months
See *allisontransmission.com/parts-service/approved-fluids* for a list of Allison Approved transmission fluids.									

* Anything other than 100 percent concentration of Allison TES 668 and/or TES 295 Approved Fluid(s) is considered a mixture and should utilize Allison TES 389 Approved Fluid(s) change intervals.
** General Vocation: less than one (1) stop per mile.
*** Severe Vocation: more than one (1) stop per mile.
† When an Allison recommended high-efficiency filter is used, the change interval is not until the Change Filter light indicates the filter is contaminated or until it has been in use for 3 years, whichever occurs first. No mileage restrictions apply. High-efficiency filters are only approved for use with AT/MT/HT Series.

Copyright © 2023 Allison Transmission, Inc. All Rights Reserved.

Table 31. Recommended Fluid Change Intervals

NOTE: Refer to Table 30 for Filter Change Intervals, Table 32 for Filter and Gasket Kit Information, and Table 33 for Fluid Capacity Information.

NOTE: Change fluid at or before recommended mileage, months, or hours have elapsed, whichever occurs first.

NOTE: Local conditions, severity of operation or duty cycle may require more or less frequent fluid change intervals that differ from the published recommended fluid change intervals of Allison Transmission. Allison Transmission recommends that customers use fluid analysis as the primary method for determining fluid change intervals. In the absence of a fluid analysis program the fluid change intervals listed in the charts should be used.

HT 700 Fluid Change Intervals			
100 Percent Concentration Allison TES 668 and/or TES 295 Approved Fluid(s)*		Allison TES 389 Approved Fluid(s)*	
General**	Severe***	General**	Severe***
100,000 Miles (160 000 km) 4000 Hours 48 Months	50,000 Miles (80 000 km) 2000 Hours 24 Months	25,000 Miles (40 000 km) 1000 Hours 12 Months	12,000 Miles (20 000 km) 500 Hours 6 Months
See *allisontransmission.com/parts-service/approved-fluids* for a list of Allison Approved transmission fluids.			
* Anything other than 100 percent concentration of Allison TES 668 and/or TES 295 Approved Fluid(s) is considered a mixture and should utilize Allison TES 389 Approved Fluid(s) change intervals. ** General Vocation: less than one (1) stop per mile. *** Severe Vocation: more than one (1) stop per mile.			

Table 32. Filter and Gasket Kit

HT 700 Filter and Gasket Kits	
Pan	Filter and Gasket Kit Part Number
114 mm (4.5 inch) Oil Pan	29530562
114 mm (4.5 inch) Oil Pan (With adapter 23016883 and pan 23016884)	29530563
152 mm (6 inch) Oil Pan	6839945
178 mm (7 inch) Oil Pan	29530564
216 mm (8.5 inch) Hydraulic Oil Pan	23012407
216 mm (8.5 inch) Electronic Oil Pan	29530565

Copyright © 2023 Allison Transmission, Inc. All Rights Reserved.

Table 33. Fluid Capacities

HT 700 Fluid Capacities (Approximate)*	
Pan Depth	Refill**
	Liters (Quarts)
114 mm (4.5 inch) oil pan	32 (34)
152 mm (6 inch) oil pan	28.5 (30)
178 mm (7 inch) oil pan	31 (33)
216 mm (8.5 inch) oil pan	40.5 (42.8)

* Fluid fill capacity is dependent on vehicle configuration. Final fluid capacity must be determined by dipstick level (see Mechanic's Tips MT1366EN (Hydraulic Controls) or MT1958EN (Electronics Controls) Section 1 or your Operator's Manual under "Care and Maintenance"
** Approximate quantities, do not include external lines, and cooler hose

Copyright © 2023 Allison Transmission, Inc. All Rights Reserved.

SIL
SERVICE INFORMATION LETTER

Allison Transmission

Revisions to this document are noted by a stripe in the left-hand margin

SUBJECT: Allison Transmission High Efficiency Filters

VOCATIONS AFFECTED: AT, MT, HT and CT 700, 5000, 6000, 8000 and 9000 Series

This SIL is to announce that Allison Transmission High Efficiency Filters and related maintenance items can now be ordered through the normal Allison Transmission Parts Distribution System. Formerly, these items were marketed through the Pall Industrial Hydraulics Distribution System.

The following tables are simplified cross reference matricies of the new Allison Transmission part numbers and the former Allison/Pall part numbers.

Table 1. Allison High Efficiency Filters

Filter Assembly	Allison New P/N	Allison/ Pall Old P/N	Bypass	Switch	Port Size	Allison New P/N Element	Allison/ Pall Old P/N Element	Seal	Bowl	Nominal Filtration Size
5000/ 6000 Cooler	29510913	23018844	None	Yes	S.F. 2.00	29510912	23049374	23018958	29510911	6 Micron
8000/ 9000 Cooler	29510914	23018847	None	Yes	S.F. 2.50	29510912	23049374	23018958	29510911	6 Micron
5000/ 6000/ 8000/ 9000 Main Remote	29530557	29503834	Yes	Yes	1.25 Pipe	29510912	23049374	23018958	29510911	6 Micron
5000/ 6000/ 8000/ 9000 Main Direct	29530556	29503833	Yes	Yes	Opt. 1.25 Pipe	29510910	23049373	23018950	23040664	6 Micron

Copyright © 2023 Allison Transmission, Inc. All Rights Reserved.

Please Note: *Allison Transmission Service Information Letters are intended for use by professional, trained technicians, not for the "do-it-yourselfer." They are written to inform those technicians of conditions that may occur on some transmission models (or serial numbers ranges) or to provide information that could assist in the proper servicing of a specific Allison transmission. Properly trained technicians have the equipment, tools, safety instructions, and know-how to do a job properly and safely. If a condition is described, do not assume that the Service Information Letter applies to your transmission, or that your transmission has the condition described. Product evolution and information updates are inevitable. Please see your authorized Allison Transmission service dealer or distributor to understand if your particular transmission may benefit from the information contained within the Service Information Letter.*

Allison Transmission • One Allison Way, Indianapolis, Indiana 46222-3271 • (317) 242-5000 • *allisontransmission.com*

Table 1. Allison High Efficiency Filters *(cont'd)*

Filter Assembly	Allison New P/N	Allison/ Pall Old P/N	Bypass	Switch	Port Size	Allison New P/N Element	Allison/ Pall Old P/N Element	Seal	Bowl	Nominal Filtration Size
700 Main	29510917	23042870	Yes	Yes	StThd O-ring-16 Hose	29510918	23040988	29510919	29510920	-
700 Cooler	29510921	23040987	Yes	No	StThd O-ring-20 Hose	29510918	23040988	29510919	29510920	-
AT-MT Cooler	29510923	23042061	Yes	Yes	StThd O-ring-12 Hose	29510922	23042062	29510922	29510922	-
AT-MT Filter Assembly With 8 Inch Leads	29501482	29501482	Yes	Yes	StThd O-ring-12 Hose	29510922	23042062	29510922	29510922	-
5000/ 6000/ 8000/ 9000 Main Remote	29542419	-	Yes	Yes	StThd O-ring-1.625–12 Hose	29510912	-	23018958	29510911	6 Micron

Table 2. Differential Pressure Switch

Differential Pressure Switch	Allison New P/N	Allison Pall Old P/N	Bypass	Switch	
Off-Highway Switch Main	29558647	23018846	50 psi	35 psi	SIL References: 2-TR-86: 700; 5000/6000/ 8000/9000 6-TR-87: AT-MT
700 Series Switch	23018846	23018846	25 psi	15 psi	
AT-MT Switch	29501991*	29510924	12 psi	8 psi	
Off Highway Switch Cooler Circuit	23018846	-	25 psi	15 psi	

* AT-MT Differential Press Switch: - New P/N Switch to be used with the new P/N Filter Assembly (Threaded Style) - Old P/N Switch replaced with new Allison P/N 29510925 for use with old P/N Filter Assembly (Flanged Style)

Copyright © 2023 Allison Transmission, Inc. All Rights Reserved.

Revisions to this document are noted by a stripe in the left-hand margin

SUBJECT: Transmission Fluid/Filter Change Recommendations

MODELS AFFECTED: Allison Commercial On-Highway Products, AT 500 Series, MT 600 Series, HT 700 Series, 1000 and 2000 Series Transmissions, 9-Speed, 3000 Series™ Transmissions (includes B300/400 and T200/300), 4000 Series™ Transmissions (includes B500 and T400/500), TC10®, H 40/50 EP™ Products, eGen Flex™

Introduction:

Optimum performance and reliability of heavy-duty automatic transmissions can be noticeably influenced by the type of fluid and filter(s) used and the frequency with which those fluid and filter(s) are changed. Allison Transmission has designed extensive programs including specifications and tests to verify the quality of fluids and consequently have specific fluid and filter change recommendations. Due to field studies, changes in emission requirements, vehicle design, and operating environments, Allison Transmission has realigned recommended fluid and filter change intervals. Heavy-duty Automatic Transmission change intervals have been revised to more closely match today's operating environments.

Model Year 2009 and 2010 Prognostics:

Prognostics that monitor and maximize fluid and filter life were offered in Model Year 2009 for 1000, 2000, 3000, and 4000 Series Transmissions. 3000 and 4000 Series Transmissions began using Prognostics with serial numbers 6510822005 (3000), 6520099957 (3000), 6610257671 (4000), 6620007438 (4000). 1000 and 2000 Series Transmission Prognostics were first available in July of 2008 (MY2009). **MY2009 Allison Prognostics must only be used with Allison TES 668® and TES 295® Approved Fluid(s)**. January 2010 Allison Prognostics are compatible with Allison TES 668, TES 295 and TES 389® Approved Fluid(s) in 3000 and 4000 Series Transmissions starting with TCM calibration CIN 4C or later (4C-xxxxx-yyy-z) and all January 2010 1000 and 2000 Series Transmissions.

All 3000 and 4000 Series Transmissions utilizing Prognostics require the use of Genuine Allison High-Capacity filters. All 1000 and 2000 Series Transmissions utilizing Prognostics require the use of Genuine Allison Control Main Spin-On filter, P/N 29539579. 1000, 2000, 3000, and 4000 Series Transmissions may or may not have this feature "enabled" or turned ON. This option requires that the OEM provide the wiring necessary and the feature enabled in the TCM. Refer to the appropriate Operator's Manual for the methods of identifying if Prognostics is enabled.

Refer to Table 4 for Filter/Fluid Change Intervals/Fluid Capacities by Series.

Copyright © 2023 Allison Transmission, Inc. All Rights Reserved.

Fluids and Specifications:

Fluid types are defined by applicable performance specification. The following transmission fluid types are approved for use in Allison Commercial On-Highway transmission products.

Fluid Type	Recommended (Intended) Usage
TES 668 and TES 295 Fluids • See *allisontransmission.com* for a list of Allison TES 668 and TES 295 Approved Fluid(s)	• General or severe duty • Extended change interval (2) (required) • Extended Transmission Coverage (ETC) policy (required) • Prognostics (required) MY2009
TES 389 Fluids • Schedule One TES 389* • Military specification fluids (for use in Military Vehicles Only) (1) • See *allisontransmission.com* for a list of Allison TES 389 Approved Fluid(s)	• General or severe duty • Standard change interval (2) • Prognostics MY2010 (3)
(1) Military specification fluids are approved for use in Military Applications in 3000, 4000, AT, MT, and HT Series products only, and are strictly prohibited from use in 1000 and 2000 Series transmission products. (2) Fluid and filter change intervals are based on transmission model, vocation (duty cycle), and fluid type (see attached charts). NOTE: Fluid drain intervals are based on 100 percent fill with Allison approved fluids. Fluid change intervals may be adjusted based on fluid analysis and fleet data. Refer to Service Information Letter (SIL) 17-TR-96 for details. (3) Prognostics are available with Allison TES 668, TES 295 and TES 389 Approved Fluid(s) only.	

Local conditions, severity of operation or duty cycle may require more or less frequent fluid change intervals that differ from the published recommended fluid change intervals of Allison Transmission. Allison Transmission recommends that customers use fluid analysis as the primary method for determining fluid change intervals. In the absence of a fluid analysis program the fluid change intervals listed in the charts must be used.

For information concerning models not listed in this publication, please call the Allison Technical Assistance Center at 1-800-252-5283.

Refer to the latest revision of Allison publication number GN2055EN, “Technicians’ Guide to Automatic Transmission Fluid”, and SIL 17-TR-96 for additional information on oil analysis and general knowledge about transmission fluids.

Non-approved Fluids

DEXRON®-III and DEXRON®-VI fluids are no longer approved for use in Commercial On-Highway transmission products and have been removed from all Allison TES 389 Approved Fluid(s) lists. TES 228® (C4 type) fluids are no longer approved for use in Commercial On-Highway transmission products and have been removed from the Allison TES 389 Approved Fluid(s) list.

Allison Fluid and Filters for Extended Transmission Coverage (ETC)

Specified fluids and genuine Allison filters must be used to qualify for Extended Transmission Coverage. This coverage is forfeited when non-approved fluids and non-genuine filters are used.

Copyright © 2023 Allison Transmission, Inc. All Rights Reserved.

Transmission Fluid Mixture Guidelines

Transmissions with a mixture of TES 668 or TES 295 fluid and Allison TES 389 Approved Fluid(s) must follow fluid/filter change recommendations for Allison TES 389 Approved Fluid(s). Upon the second oil change, if the customer reinstalls TES 668 or TES 295, the fluid/filter change recommendations outlined in 100 percent Allison TES 668 or TES 295 Approved Fluid(s) must be followed.

Fluid Exchange Machines:

Fluid exchanging machines are not recommended or recognized due to variation and inconsistencies that may not guarantee removal of 100 percent of the used fluid.

3000 and 4000 Series, H 40/50 EP and eGen Flex Filters:

New Genuine Allison High Capacity filters were released into production beginning with:

6510670912 (3000) 6610205144 (4000) 7110001551) (H 40/50 EP and eGen Flex) 6520067342 (3000) 6620002521 (4000)

High-Capacity Filters:

Genuine Allison 3000 and 4000 Series, H 40/50 EP and eGen Flex high-capacity filters were released into production beginning July 2006. High-capacity filters allow extended filter change intervals when used with Allison TES 668 or TES 295 Approved Fluid(s). High-capacity service filters can be identified by P/N 29558294 or P/N 29558295 stamped into the filter end cap. Previous Allison 3000 and 4000 Series and H 40/50 EP filters can be identified by P/N 29538231 or P/N 29538232 stamped into the filter end cap.

Table 1. Filter Kits

Series	High-Capacity Filter Kit
3000 and 4000	29558328 (2 inch)
	29558329 (4 inch)
H 40/50 EP and eGen Flex	29545785

NOTE: Extended 3000 and 4000 Series transmissions Allison TES 668 or TES 295 Approved Fluid(s) and filter change intervals are only allowed with Genuine Allison high-capacity filters. Filters must be changed at or before recommended intervals.

Copyright © 2023 Allison Transmission, Inc. All Rights Reserved.

Initial Transmission Filter Change Schedule (Production/ReTran®)

*3000 and 4000 SeriesTransmissions — Main Filter 5000 miles (8000 km)/200 hours

*3000 and 4000 Series Transmission ReTran — Main Filter 5000 miles (8000 km)/200 hours

H 40/50 EP and eGen Flex Spin-On Control Main Filter 5000 miles (8000 km)/200 hours

AT Auxiliary Filter 5000 miles (8000 km)/200 hours

MT Auxiliary Filter 5000 miles (8000 km)/200 hours

*Not required beginning with S/N 6510670912, S/N 6610205144, S/N 6520067342, S/N 6620002521, and S/N 9320005689, S/N 9370006284, S/N 9420006679, S/N 9470005459

1000, 2000, 3000, and 4000 Series Hours vs. Miles Chart

Table 2 (2000/3000 Hour Based Maintenance) and Table 3 (4000/6000 Hour Based Maintenance) list the equivalent mileage based on the Allison recommended change intervals for Allison TES 668 or TES 295 Approved Fluid(s). For example, vocations or vehicles that operate with a high density shift cycle typically reach the 6000/3000 hour change limit **before** the recommended mileage limit.

An example could be a transit bus equipped with a B500R that operates an average of 7 mph (11 km/h). Recommended fluid/filter change interval for a B500R equipped with 2 inch control module in a transit vocation using a TES 668 or TES 295 fluid is 150,000 miles/240 000 km/6000 hours or 48 months whichever occurs first. Using Table 3 Hours vs. Miles, a vehicle operating at 7 mph (11 km/h) will travel approximately 42,000 miles (66 000 km) in 6000 hours. If an odometer is used to determine when to change the transmission fluid and filters, this specific vehicle would change the fluid every 42,000 miles (66 000 km) and filters every 21,000 miles (33 000 km).

Estimating average mph can be approximated by dividing total distance traveled in a typical day by the hours elapsed during that total distance. An example would be a vehicle that operates on average 96 miles (155 km) a day over an 8 hour period would average 12 mph (19 km/h).

Copyright © 2023 Allison Transmission, Inc. All Rights Reserved.

Table 2. 2000 and 3000 Hour Based Maintenance — Hours vs. Miles

2000 Hour Based Maintenance				3000 Hour Based Maintenance			
km/h Average	km Equivalent	MPH Average	miles Equivalent	km/h Average	km Equivalent	MPH Average	miles Equivalent
5	10000	3	6000	5	15000	3	9000
6	12000	4	8000	6	18000	4	12000
8	16000	5	1000	8	24000	5	15000
10	20000	6	12000	10	30000	6	18000
11	22000	7	14000	11	33000	7	21000
13	26000	8	16000	13	39000	8	24000
14	28000	9	18000	14	42000	9	27000
16	32000	10	20000	16	48000	10	30000
18	36000	11	22000	18	54000	11	33000
19	38000	12	24000	19	57000	12	36000
21	42000	13	26000	21	63000	13	39000
23	46000	14	28000	23	69000	14	42000
24	48000	15	30000	24	72000	15	45000
26	52000	16	32000	26	78000	16	48000
27	54000	17	34000	27	81000	17	51000
29	58000	18	36000	29	87000	18	54000
31	62000	19	38000	31	93000	19	57000
32	64000	20	40000	32	96000	20	60000
34	68000	21	42000	34	102000	21	63000
35	70000	22	44000	35	105000	22	66000
37	74000	23	46000	37	111000	23	69000
39	78000	24	48000	39	117000	24	72000
40	80000	25	50000	40	120000	25	75000

Copyright © 2023 Allison Transmission, Inc. All Rights Reserved.

Table 3. 4000 and 6000 Hour Based Maintenance — Hours vs. Miles

4000 Hour Based Maintenance				6000 Hour Based Maintenance			
km/h Average	km Equivalent	MPH Average	miles Equivalent	km/h Average	km Equivalent	MPH Average	miles Equivalent
5	20000	3	12000	5	30000	3	18000
6	24000	4	16000	6	36000	4	24000
8	32000	5	20000	8	48000	5	30000
10	40000	6	24000	10	60000	6	36000
11	44000	7	28000	11	66000	7	42000
13	52000	8	32000	13	78000	8	48000
14	56000	9	36000	14	84000	9	54000
16	64000	10	40000	16	96000	10	60000
18	72000	11	44000	18	108000	11	66000
19	76000	12	48000	19	114000	12	72000
21	84000	13	52000	21	126000	13	78000
23	92000	14	56000	23	138000	14	84000
24	96000	15	60000	24	144000	15	90000
26	104000	16	64000	26	156000	16	96000
27	108000	17	68000	27	162000	17	102000
29	116000	18	72000	29	174000	18	108000
31	124000	19	76000	31	186000	19	114000
32	128000	20	80000	32	192000	20	120000
34	136000	21	84000	34	204000	21	126000
35	140000	22	88000	35	210000	22	132000
37	148000	23	92000	37	222000	23	138000
39	156000	24	96000	39	234000	24	144000
40	160000	25	100000	40	240000	25	150000

Copyright © 2023 Allison Transmission, Inc. All Rights Reserved.

Table 4. Filter/Fluid Change Intervals/Fluid Capacities

1000 and 2000 Series	Filter	Change Intervals	Refer to Appendix A
		Filter Types and Part Numbers	Refer to Appendix A
	Fluid	Change Intervals	Refer to Appendix A
		Fluid Capacity	Refer to Appendix A
9-Speed	Filter	Change Intervals	Refer to Appendix B
		Filter Types and Part Numbers	Refer to Appendix B
	Fluid	Change Intervals	Refer to Appendix B
		Fluid Capacity	Refer to Appendix B
3000 and 4000 Series	Filter	Change Intervals	Refer to Appendix C
		Filter and Gasket Kits	Refer to Appendix C
	Fluid	Change Intervals	Refer to Appendix C
		Fluid Capacity	Refer to Appendix C
		Additional Fill for Allison Coolers/Accumulators	Refer to Appendix C
TC10	Filter	Change Intervals	Refer to Appendix D
		Filter and Gasket Kits	Refer to Appendix D
	Fluid	Change Intervals	Refer to Appendix D
		Fluid Capacity	Refer to Appendix D
H 40/50 EP and eGen Flex	Filter	Change Intervals	Refer to Appendix E
		Filter and Gasket Kits	Refer to Appendix E
	Fluid	Change Intervals	Refer to Appendix E
		Fluid Capacity	Refer to Appendix E
AT 500 Series	Filter	Change Intervals	Refer to Appendix F
		Filter and Gasket Kits	Refer to Appendix F
	Fluid	Change Intervals	Refer to Appendix F
		Fluid Capacity	Refer to Appendix F
MT 600 Series	Filter	Change Intervals	Refer to Appendix G
		Filter and Gasket Kits	Refer to Appendix G
	Fluid	Change Intervals	Refer to Appendix G
		Fluid Capacity	Refer to Appendix G
HT 700 Series	Filter	Change Intervals	Refer to Appendix H
		Filter and Gasket Kits	Refer to Appendix H
	Fluid	Change Intervals	Refer to Appendix H
		Fluid Capacity	Refer to Appendix H

Copyright © 2023 Allison Transmission, Inc. All Rights Reserved.

Appendix A. 1000/2000 Filter Change/Fluid Change Intervals

Table 5. Recommended Filter Change/Fluid Intervals

NOTE: Refer to Table 6 for Filter Type/Part Number Information and Table 7 for Fluid Capacity Information.

NOTE: Change fluid and filters at or before recommended mileage, months, or hours have elapsed, whichever occurs first.

NOTE: Local conditions, severity of operation or duty cycle may require more or less frequent fluid change intervals that differ from the published recommended fluid change intervals of Allison Transmission. Allison Transmission recommends that customers use fluid analysis as the primary method for determining fluid change intervals. In the absence of a fluid analysis program the fluid change intervals listed in the charts should be used.

1000 and 2000 Series Fluid And Filter Change Interval Recommendations						
			Prognostics Turned Off or Not Calibrated in TCM		Prognostics Turned On	
		Duty Cycle	Allison TES 668 and/orTES 295 Approved Fluid(s)	Allison TES 389 Approved Fluid(s)	Allison TES 668 and/or TES 295 Approved Fluid(s)	Allison TES 389 Approved Fluid(s)
Fluid		General*	150,000 Miles (240,000 km) 4,000 Hours 48 Months	50,000 Miles (80,000 km) 2,000 Hours 24 Months	When indicated by controller or 48 months, whichever occurs first	When indicated by controller or 24 months, whichever occurs first (MY2010)
		Severe**	75,000 Miles (120,000 km) 3,000 Hours 36 Months	12,000 Miles (20,000 km) 500 Hours 6 Months		
Filters	Spin-On Control Main Filter	General*	50,000 Miles (80,000 km) 2,000 Hours 24 Months	50,000 Miles (80,000 km) 2,000 Hours 24 Months	When indicated by controller or 48 months, whichever occurs first	When indicated by controller or 24 months, whichever occurs first (MY2010)
		Severe**	50,000 Miles (80,000 km) 2,000 Hours 24 Months	12,000 Miles (20,000 km) 500 Hours 6 Months		
	Internal Filter	All	Overhaul	Overhaul	Overhaul	Overhaul

See *allisontransmission.com/parts-service/approved-fluids* for a list of Allison Approved transmission fluids.

NOTE: TES 389 cannot be used in MY09.

NOTE: Anything other than 100 percent concentration of Allison TES 668 and/or TES 295 Approved Fluid(s) is considered a mixture and should utilize TES 389 change intervals. Also, mixtures shall not be used with Prognostics.

* General Vocation: All vocations not classified as Severe
** Severe Vocation: On/Off Highway, Refuse, City Transit, Shuttle Transit

Copyright © 2023 Allison Transmission, Inc. All Rights Reserved.

Table 6. Filter Type/Part Number

1000 and 2000 Series Filters	
Filter Type	**Part Number**
Control Main	29539579
Pan Suction (Shallow)*	29542833, 29537965**
Pan Suction (Deep)*	29542824

* Overhaul Only
** See SIL 12-1K2K-10, Interchangeability of the Shallow Sump Filters

Table 7. Fluid Capacity

NOTE: Approximate Fluid Loss for Control Main Filter (Spin-On) = 0.47 liters (1 pint)

1000 and 2000 Series Capacities (Approximate) *		
Sump Type	Initial Fill**	Refill**
	Liters (Quarts)	Liters (Quarts)
Standard	14 (14.8)	10 (10.6)
Shallow	12 (12.7)	7 (7.4)

* Fluid fill capacity is dependent on vehicle configuration. Final fluid capacity must be determined by dipstick level (see Mechanic's Tips MT3190EN, MT4007EN Section 1 or your Operator's Manual under "Care and Maintenance".
** Approximate quantities, do not include external lines, cooler, and hoses.

Copyright © 2023 Allison Transmission, Inc. All Rights Reserved.

Appendix B. 9-Speed Filter Change/Fluid Change Intervals

Table 8. Recommended Filter Change/Fluid Intervals

NOTE: Refer to Table 9 for Filter Type/Part Number Information and Table 10 for Fluid Capacity Information.

NOTE: Change fluid and filters at or before recommended mileage, months, or hours have elapsed, whichever occurs first.

NOTE: Local conditions, severity of operation or duty cycle may require more or less frequent fluid change intervals that differ from the published recommended fluid change intervals of Allison Transmission. Allison Transmission recommends that customers use fluid analysis as the primary method for determining fluid change intervals. In the absence of a fluid analysis program the fluid change intervals listed in the charts should be used.

9-Speed Fluid And Filter Change Interval Recommendations				
			Prognostics Turned Off or Not Calibrated in TCM	**Prognostics Turned On**
		Duty Cycle	**Allison TES 668 and/or TES 295 Approved Fluid(s)**	**Allison TES 668 and/or TES 295 Approved Fluid(s)**
Fluid		General*	150,000 Miles (240,000 km) 4,000 Hours 48 Months	When indicated by controller or 48 months, whichever occurs first
		Severe**	75,000 Miles (120,000 km) 3,000 Hours 36 Months	
Filters	**Spin-On Control Main Filter**	General*	50,000 Miles (80,000 km) 2,000 Hours 24 Months	When indicated by controller or 48 months, whichever occurs first
		Severe**	50,000 Miles (80,000 km) 2,000 Hours 24 Months	
	Internal Filter	All	Overhaul	Overhaul
See *allisontransmission.com/parts-service/approved-fluids* for a list of Allison Approved transmission fluids.				
* General Vocation: All vocations not classified as Severe ** Severe Vocation: On/Off Highway, City Transit, Shuttle Transit				

Table 9. Filter Type/Part Number

9-Speed Filters	
Filter Type	**Part Number**
Control Main	29539579
Suction Filter Assembly (Pan) *	29569044
*Suction Filter Includes One Pickup Tube Seal	

Copyright © 2023 Allison Transmission, Inc. All Rights Reserved.

Table 10. Fluid Capacity

9-Speed Capacities (Approximate) *		
Sump Type	Initial Fill**	Refill**
	Liters (Quarts)	Liters (Quarts)
Shallow	15.0 (15.9)	7.6 (8.0)

* Fluid fill capacity is dependent on vehicle configuration. Final fluid capacity must be determined by dipstick level (see Mechanic's Tips MT8890EN Section 1 or Operator's Manual OM8888EN under "Care and Maintenance".
** Approximate quantities, do not include external lines, cooler, and hoses.

Copyright © 2023 Allison Transmission, Inc. All Rights Reserved.

Appendix C. 3000/4000 Filter Change/Fluid Change Intervals

Table 11. Recommended Filter Change/Fluid Change Intervals

NOTE: Refer to Table 13 for Filter and Gasket Kit Information, Table 14 for Fluid Capacity Information, Table 15 for Additional Fill for Allison Coolers/Accumulators, and Figure 1 for Drain Plug Location, Filter Locations, and Control Module Dimensions.

NOTE: Change fluid and filters at or before recommended mileage, months, or hours have elapsed, whichever occurs first.

NOTE: Local conditions, severity of operation or duty cycle may require more or less frequent fluid change intervals that differ from the published recommended fluid change intervals of Allison Transmission. Allison Transmission recommends that customers use fluid analysis as the primary method for determining fluid change intervals. In the absence of a fluid analysis program the fluid change intervals listed in the charts should be used.

3000 and 4000 Series Fluid And Filter Change Interval Recommendations					
		Prognostics Turned Off or Not Calibrated in TCM		Prognostics Turned On	
	Duty Cycle	Allison TES 668 and/or TES 295 Approved Fluid(s)	Allison TES 389 Approved Fluid(s)	Allison TES 668 and/or TES 295 Approved Fluid(s)	Allison TES 389 Approved Fluid(s)
Fluid	General*	300,000 Miles (480,000 km) 6,000 Hours 48 Months	25,000 Miles (40,000 km) 1,000 Hours 12 Months	When indicated by controller or 60 months, whichever occurs first	When indicated by controller or 24 months, whichever occurs first
	Severe**	150,000 Miles (240,000 km) 6,000 Hours 48 Months	12,000 Miles (20,000 km) 500 Hours 6 Months		
See *allisontransmission.com/parts-service/approved-fluids* for a list of Allison Approved transmission fluids. * General Vocation: All vocations not classified as Severe ** Severe Vocation: On/Off Highway, Refuse, City Transit, Shuttle Transit					

Copyright © 2023 Allison Transmission, Inc. All Rights Reserved.

Table 11. Recommended Filter Change/Fluid Change Intervals *(cont'd)*

3000 and 4000 Series Fluid And Filter Change Interval Recommendations						
			Prognostics Turned Off or Not Calibrated in TCM		Prognostics Turned On	
		Duty Cycle	Allison TES 668 and/or TES 295 Approved Fluid(s)	Allison TES 389 Approved Fluid(s)	Allison TES 668 and/or TES 295 Approved Fluid(s)	Allison TES 389 Approved Fluid(s)
Filters	Main Filter	General*	75,000 Miles (120,000 km) 3,000 Hours 36 Months	25,000 Miles (40,000 km) 1,000 Hours 12 Months	When indicated by controller or 60 months, whichever occurs first	When indicated by controller or 24 months, whichever occurs first
		Severe**	75,000 Miles (120,000 km) 3,000 Hours 36 Months	12,000 Miles (20,000 km) 500 Hours 6 Months		
	Internal Filter	All	Overhaul	Overhaul	Overhaul	Overhaul
	Lube/ Auxiliary Filter	General*	75,000 Miles (120,000 km) 3,000 Hours 36 Months	25,000 Miles (40,000 km) 1,000 Hours 12 Months	When indicated by controller or 60 months, whichever occurs first	When indicated by controller or 24months, whichever occurs first
		Severe**	75,000 Miles (120,000 km) 3,000 Hours 36 Months	12,000 Miles (20,000 km) 500 Hours 6 Months		

NOTE: TES 389 cannot be used in MY09.

NOTE: Anything other than 100 percent concentration of Allison TES 668 and/or TES 295 Approved Fluids(s) is considered a mixture and should utilize TES 389 change intervals. Also, mixtures shall not be used with Prognostics.

* General Vocation: All vocations not classified as Severe
** Severe Vocation: On/Off Highway, Refuse, City Transit, Shuttle Transit

Copyright © 2023 Allison Transmission, Inc. All Rights Reserved.

Table 12. Recommended Filter Change/Fluid Change Intervals — MIL-PRF-2104, MIL-PRF-21260, MIL-PRF-32626, MIL-PRF-46167

NOTE: Change filters/fluid at or before recommended mileage, months, or hours have elapsed, whichever occurs first.

NOTE: Local conditions, severity of operation or duty cycle may require more or less frequent fluid change intervals that differ from the published recommended fluid change intervals of Allison Transmission. Allison Transmission recommends that customers use fluid analysis as the primary method for determining fluid change intervals. In the absence of a fluid analysis program the fluid change intervals listed in the charts should be used.

Filter Change/Fluid Change Intervals — MIL-PRF-2104, MIL-PRF-21260, MIL-PRF-32626, MIL-PRF-46167	
PRIOR TO HIGH-CAPACITY FILTERS or W/ HIGH-CAPACITY FILTERS* WITH PROGNOSTICS TURNED "OFF" OR NOT CALIBRATED IN TCM	
General**	**Severe*****
25,000 miles (40 000 km) 1000 hours 12 months	12,000 miles (20 000 km) 500 hours 6 months

* High-Capacity Filters released in models starting with S/N 6510670912, S/N 6520067342 (3000 Series) and S/N 6610205144, S/N 66200002521 (4000 Series)
** General Vocation: Intercity Coach with duty cycle less than or equal to one (1) stop per mile and all other vocations not listed in severe vocation.
*** Severe Vocation: All Retarders, On/Off Highway, Refuse, Transit, Shuttle Transit, and Intercity Coach with duty cycle greater than one (1) stop per mile.

Table 13. Filter and Gasket Kits

NOTE: Refer to Figure 1 for Filter Locations, and Control Module Dimensions.

3000 and 4000 Series Filter and Gasket Kits	
Kit Description	**Filter (High-Capacity)**
Filter Kit, 4" Service Filters for 2" or 7" sump	29558328
Filter Kit, 6" Service Filters for 4" sump	29558329

NOTE: Square cut filter cover O-rings P/N 29501469 are no longer included in High-Capacity Filter Kits P/N 29558328 and P/N 29558329. When servicing former filter covers P/N 29507434, the required square cut filter cover O-rings must be ordered separately. Square cut filter cover O-rings were originally used in transmissions manufactured prior to January 22, 1996, prior to 3000 Series . S/N 6510069120 or 4000 Series S/N 6610009730. Former filter covers can be identified by the part number cast on the exterior side of the filter cover. Any 3000 and 4000 Series transmissions with the former filter cover requires one square cut filter cover O-ring (4) and one O-ring (5) (refer to Figure 1) per filter cover. O-ring (5) is included in the aforementioned high-capacity filter kits. Some remanufactured transmissions may require the use of square cut O-rings if equipped with the former filter covers.

Copyright © 2023 Allison Transmission, Inc. All Rights Reserved.

Table 14. Fluid Capacity

3000 and 4000 Series Fluid Capacities (Approximate)*			
Transmissions Fluid Loss — Filter Change Only: Main Filter = 1.9 liters (2 quarts) Lube Filter = 7.6 liters (8 quarts)			
Model	Sump	Initial Fill**	Refill**
		Liters (Quarts)	Liters (Quarts)
3000	4 inch	27 (29)	18 (19)
3000	2 inch	25 (26)	16 (17)
4000	4 inch***	45 (48)	37 (39)
4000	2 inch***	38 (40)	30 (31)

* Fluid fill capacity is dependent on vehicle configuration. Final fluid capacity must be determined by dipstick level (see Mechanic's Tips MT3004EN Section 1 or your Operator's Manual under "Care and Maintenance".
** Approximate quantities, do not include external lines, cooler, and hose
*** Add 2.8 Liters (3 Quarts) for Transmissions with PTO

Table 15. Additional Fill for Allison Coolers/Accumulators

3000 and 4000 Series Additional Fill for Allison Coolers/Accumulators		
Product Family	**Cooler Type**	**Liters (Quarts)**
3000/4000	Non-Retarder Direct Mount	1.0 (1.1)
3000/4000	Remote/Retarder/Sump	2.5 (2.6)
3000	Retarder Accumulator	1.2 (1.3)
4000	Direct Mount/Retarder	2.1 (2.2)
4000	Retarder Accumulator	0.6 (0.6)

Copyright © 2023 Allison Transmission, Inc. All Rights Reserved.

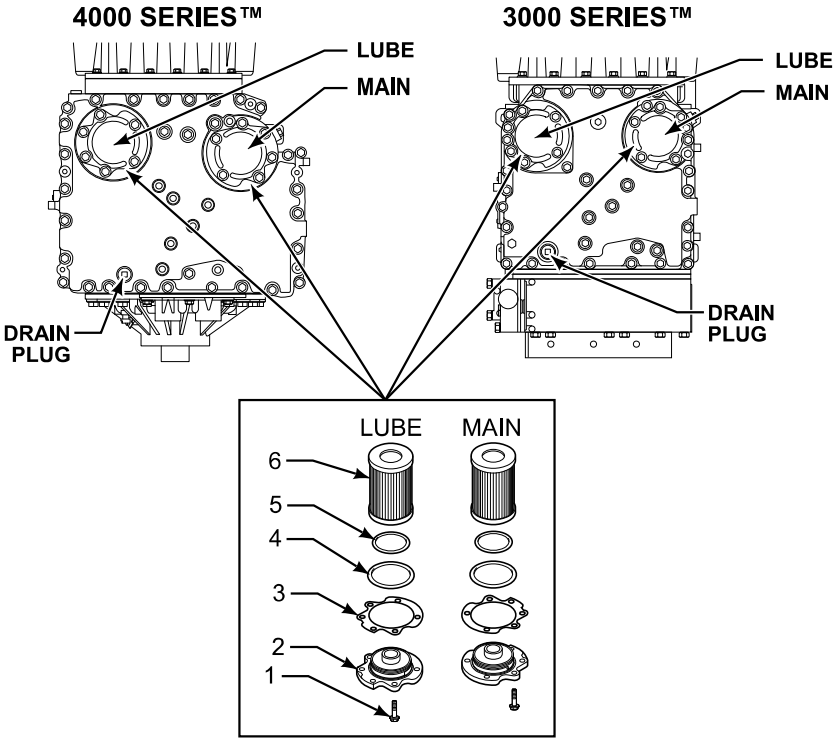

NOTE: Torque all filter cover retaining bolts to 51-61 N•m (38-45 lb ft)
NOTE: Main and Lube Filter designations cast into bottom of Control Module
NOTE: O-Ring #4 is no longer included in high capacity filter kits.

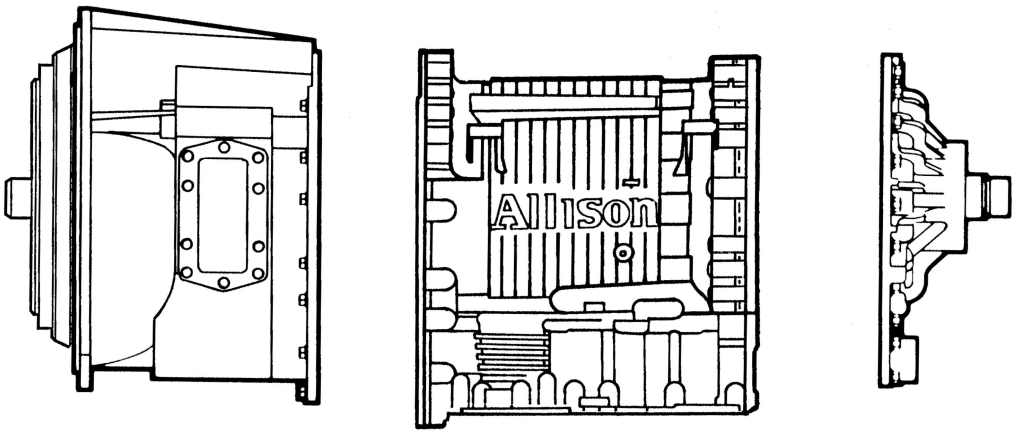

* 4 inch Control Module Measures 3.5 inch approximately
2 inch Control Module Measures 1.75 inch approximately

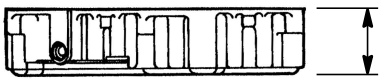

5308987

Figure 1. Drain Plug/Filter Location and Control Module Dimensions

Copyright © 2023 Allison Transmission, Inc. All Rights Reserved.

Appendix D. TC10 Filter Change/Fluid Change Intervals

Table 16. Recommended Filter Change/Fluid Change Intervals

NOTE: Refer to Table 17 for Filter and Gasket Kit Information, Table 18 for Fluid Capacity Information, and Figure 2 for Drain Plug and Filter Locations.

NOTE: Change fluid and filters at or before recommended mileage, months, or hours have elapsed, whichever occurs first.

NOTE: Local conditions, severity of operation or duty cycle may require more or less frequent fluid change intervals that differ from the published recommended fluid change intervals of Allison Transmission. Allison Transmission recommends that customers use fluid analysis as the primary method for determining fluid change intervals. In the absence of a fluid analysis program the fluid change intervals listed in the charts should be used.

TC10 Tractor Series Fluid And Filter Change Interval Recommendations				
			Prognostics Turned Off or Not Calibrated in TCM	**Prognostics Turned On**
		Duty Cycle	**Allison TES 668 and/or TES 295 Approved Fluid***	**Allison TES 668 and/or TES 295 Approved Fluid***
Fluid		General	500,000 Miles (804,700 km) 20,000 Hours 60 Months	When indicated by controller or 60 months, whichever occurs first
FIters	**Internal Filter**	General	Overhaul	Overhaul
	Lube/ Auxiliary Filter	General	500,000 Miles (804,700 km) 20,000 Hours 60 Months	When indicated by controller or 60 months, whichever occurs first
See *allisontransmission.com/parts-service/approved-fluids* for a list of Allison Approved transmission fluids.				
* 100 percent concentration of Allison TES 668 and/or TES 295 Approved Fluids and Allison Genuine Filters are required.				

Table 17. Filter and Gasket Kits

NOTE: Refer to Figure 2 for Filter Location.

TC10 Filter and Gasket Kits	
Description	**Part Number**
Kit - Oil Filter	29554653
Oil Filter*	29558295
O-Ring, Cover*	29554650
Seal, Drain Plug*	24205123
Instruction Sheet # 350*	29554750
Internal Suction Filter**	29551998
* Included in the Oil Filter Kit ** Overhaul Only	

Copyright © 2023 Allison Transmission, Inc. All Rights Reserved.

Table 18. Fluid Capacity

TC10 Capacities (Approximate) *		
Model	Initial Fill **	Refill **
	Liters (Quarts)	Liters (Quarts)
TC10	49 (52)	38 (40)

* Fluid fill capacity is dependent on vehicle configuration. Final fluid capacity must be determined by dipstick level (refer to Mechanic's Tips MT7119EN Section 2 or your Operator's Manual OM7118EN under "Care and Maintenance").
** Approximate quantities, do not include external circuits.

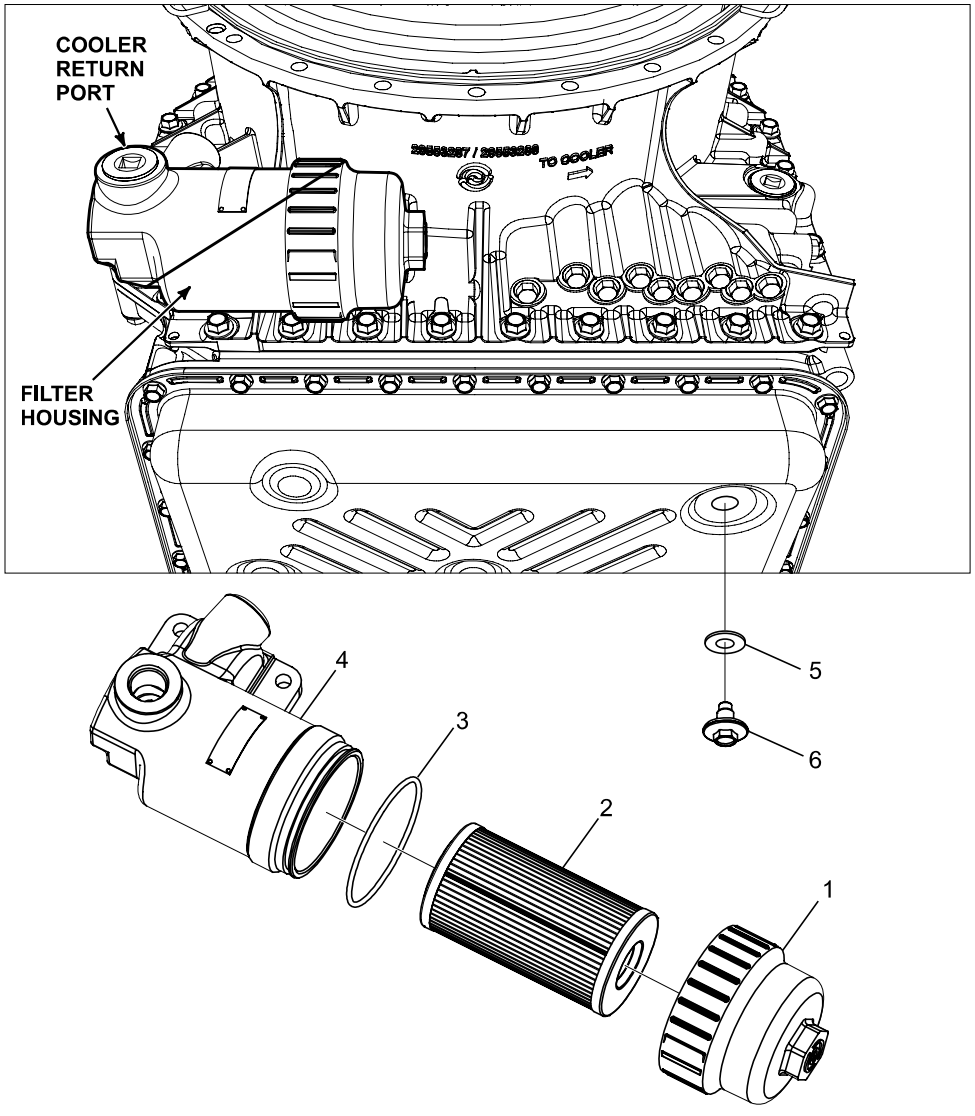

Figure 2. Drain Plug and Filter Locations

Copyright © 2023 Allison Transmission, Inc. All Rights Reserved.

Appendix E. H 40/50 EP and eGen Flex Filter Change/Fluid Change Intervals

Table 19. Recommended Filter Change/Fluid Change Intervals

NOTE: Both H 40/50 EP and eGen Flex Drive Units utilize TES 668 fluid. H 40/50 EP Drive Units previously used TES 468 fluid until July 2021.

NOTE: Change filters/fluid at or before recommended mileage or months have elapsed, whichever occurs first.

NOTE: H 40/50 EP and eGen Flex Drive Unit Lube Filter extended time change intervals are only valid with the use of Allison Transmission High-Capacity filters. High-Capacity filters implemented into production starting with S/N 7110001551.

NOTE: Local conditions, severity of operation or duty cycle may require more or less frequent fluid change intervals that differ from the published recommended fluid change intervals of Allison Transmission. Allison Transmission recommends that customers use fluid analysis as the primary method for determining fluid change intervals. In the absence of a fluid analysis program the fluid change intervals listed in the charts should be used.

H 40/50 EP and eGen Flex Fluid And Filter Change Interval Recommendations			
		Duty Cycle	**Allison TES 668 and/or TES 295 Approved Fluid(s)***
Fluid		General	100,000 Miles (160,000 km) or 48 Months
Flters	**Control Main Filter**	Intial	5,000 Miles (8,000 km) or 200 Hours
		After Intial	50,000 Miles (80,000 km) or 24 Months
	Lube Filter	High Capacity	100,000 Miles (160,000 km) or 48 Months
	Sump/Internal Filter	General	Overhaul
See *allisontransmission.com/parts-service/approved-fluids* for a list of Allison Approved transmission fluids.			
*100 Percent Concentration of Allison TES 668 and/or TES 295 Approved Fluid(s) and Allison Genuine Filters are required.			

Table 20. Filter and Gasket Kits

NOTE: Refer to Figure 3 for Drain Plug and Filter Locations.

H 40/50 EP and eGen Flex Filter and Gasket Kits	
Description	**Part Number**
Lube Filter and Gasket Kit	29545785
Control Main Filter	29539579

Copyright © 2023 Allison Transmission, Inc. All Rights Reserved.

Table 21. Fluid Capacity

NOTE: Refer to Figure 3 for Drain Plug and Filter Locations.

H 40/50 EP and eGen Flex Capacities (Approximate) *	
Transmissions Fluid Loss — Filter Change Only: Control Main filter = 0.94 liters (1 quart) Lube Filter = 2.84 liters (3 quarts)	
Model	Refill
	Liters (Quarts)
H 40/50 EP Drive Unit	15.1 (16)**
eGen Flex Drive Unit	15.1 (16)***

* Fluid fill capacity is dependent on vehicle configuration.
** Approximate quantities, do not include DPIM, cooler, and external lines.
*** Approximate quantities, do not include cooler or external lines.

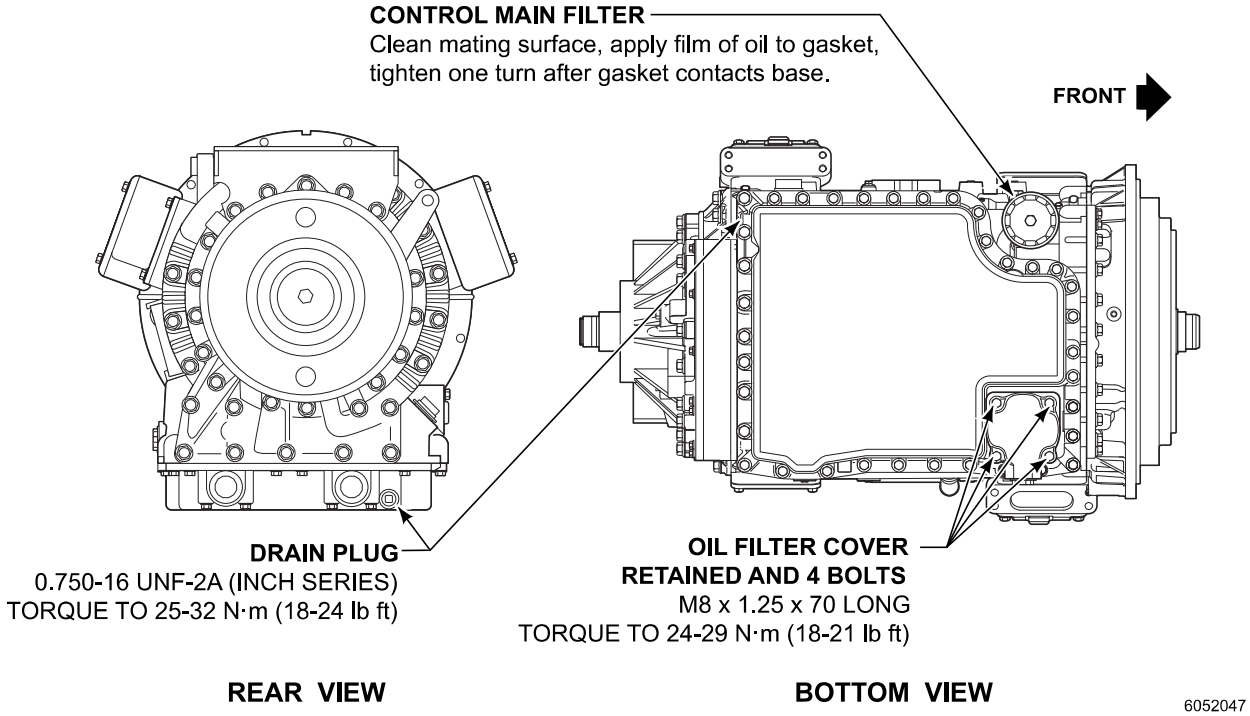

Figure 3. H 40/50 EP and eGen Flex Drain Plug and Filter Locations

Copyright © 2023 Allison Transmission, Inc. All Rights Reserved.

Appendix F. AT 500 Series Filter Change/Fluid Change Intervals

Table 22. Recommended Filter Change Intervals

NOTE: Refer to Table 23 for Fluid Change Intervals, Table 24 for Filter and Gasket Kit Information and Table 25 for Fluid Capacity Information.

NOTE: Change filters at or before recommended mileage, months, or hours have elapsed, whichever occurs first.

<table>
<tr><th colspan="8">AT 500 Filter Change Intervals</th></tr>
<tr><th colspan="4">100 Percent Concentration Allison TES 668 and/or TES 295 Approved Fluid(s)*</th><th colspan="4">Allison TES 389 Approved Fluid(s)*</th></tr>
<tr><th colspan="2">Internal Filter</th><th colspan="2">Lube/Auxiliary Filter</th><th colspan="2">Internal Filter</th><th colspan="2">Lube/Auxiliary Filter</th></tr>
<tr><td>General***</td><td>Severe****</td><td colspan="2">Initial
5000 Miles (8000 km)
200 Hours</td><td>General***</td><td>Severe****</td><td colspan="2">Initial
5000 Miles (8000 km)
200 Hours</td></tr>
<tr><td colspan="2">Polyester Filter**</td><td>General***†</td><td>Severe****†</td><td colspan="2">Polyester Filter**</td><td>General***†</td><td>Severe****†</td></tr>
<tr><td>Overhaul</td><td>Overhaul</td><td rowspan="3">50,000 Miles
(80 000 km)
2000 Hours
24 Months</td><td rowspan="3">25,000 Miles
(40 000 km)
1000 Hours
12 Months</td><td>Overhaul</td><td>Overhaul</td><td rowspan="3">25,000 Miles
(40 000 km)
1000 Hours
12 Months</td><td rowspan="3">12,000 Miles
(20 000 km)
500 Hours
6 Months</td></tr>
<tr><td colspan="2">Wire Mesh Filter</td><td colspan="2">Wire Mesh Filter</td></tr>
<tr><td>100,000 Miles
(160 000 km)
4000 Hours
48 Months</td><td>50,000 Miles
(80 000 km)
2000 Hours
24 Months</td><td>25,000 Miles
(40 000 km)
1000 Hours
12 Months</td><td>12,000 Miles
(20 000 km)
500 Hours
6 Months</td></tr>
<tr><td colspan="8">See allisontransmission.com/parts-service/approved-fluids for a list of Allison Approved transmission fluids.</td></tr>
<tr><td colspan="8">* Anything other than 100 percent concentration of Allison TES 668 and/or TES 295 Approved Fluid(s) is considered a mixture and should utilize Allison TES 389 Approved Fluid(s) change intervals.
*** General Vocation: less than one (1) stop per mile.
**** Severe Vocation: more than one (1) stop per mile.
** For additional information regarding the polyester internal filter see the latest revision of SIL 9-TR-01.
† When an Allison recommended high-efficiency filter is used, the change interval is not until the Change Filter light indicates the filter is contaminated or until it has been in use for 3 years, whichever occurs first. No mileage restrictions apply. High-efficiency filters are only approved for use with AT/MT/HT Series.</td></tr>
</table>

Copyright © 2023 Allison Transmission, Inc. All Rights Reserved.

Table 23. Recommended Fluid Change Intervals

NOTE: Refer to Table 22 for Filter Change Intervals, Table 24 for Filter and Gasket Kit Information and Table 25 for Fluid Capacity Information.

NOTE: Change fluid at or before recommended mileage, months, or hours have elapsed, whichever occurs first.

NOTE: Local conditions, severity of operation or duty cycle may require more or less frequent fluid change intervals that differ from the published recommended fluid change intervals of Allison Transmission. Allison Transmission recommends that customers use fluid analysis as the primary method for determining fluid change intervals. In the absence of a fluid analysis program the fluid change intervals listed in the charts should be used.

AT 500 Fluid Change Intervals			
100 Percent Concentration Allison TES 668 and/or TES 295 Approved Fluid(s)*		Allison TES 389 Approved Fluid(s)*	
General**	Severe***	General**	Severe***
100,000 Miles (160 000 km) 4000 Hours 48 Months	50,000 Miles (80 000 km) 2000 Hours 24 Months	25,000 Miles (40 000 km) 1000 Hours 12 Months	12,000 Miles (20 000 km) 500 Hours 6 Months
See *allisontransmission.com/parts-service/approved-fluids* for a list of Allison Approved transmission fluids.			
* Anything other than 100 percent concentration of Allison TES 668 and/or TES 295 Approved Fluid(s) is considered a mixture and should utilize Allison TES 389 Approved Fluid(s) change intervals. ** General Vocation: less than one (1) stop per mile. *** Severe Vocation: more than one (1) stop per mile.			

Table 24. Filter and Gasket Kits

NOTE: See the latest revision of SIL 9-TR-01 for additional information.

AT 500 Filter and Gasket Kits	
Pan	Oil Filter and Gasket Kit Part Number
97 mm (3.8 inch) oil pan	29540976
135 mm (5.3 inch) oil pan	29538489

Table 25. Fluid Capacity

AT 500 Capacities (Approximate)*	
Pan Depth	Initial Fill**
	Liters (Quarts)
97 mm (3.8 inch) oil pan	8.5 (9)
135 mm (5.3 inch) oil pan	15 (16)
* Fluid fill capacity is dependent on vehicle configuration. Final fluid capacity must be determined by dipstick level (see Mechanic's Tips MT1321EN Section 1 or your Operator's Manual under "Care and Maintenance" ** Approximate quantities, do not include external lines and cooler hose	

Copyright © 2023 Allison Transmission, Inc. All Rights Reserved.

Appendix G. MT 600 Series Filter Change/Fluid Change Intervals

Table 26. Recommended Filter Change Intervals

NOTE: Refer to Table 27 for Fluid Change Intervals, Table 28 for Filter and Gasket Kit Information, and Table 29 for Fluid Capacity Information.

NOTE: Change filters at or before recommended mileage, months, or hours have elapsed, whichever occurs first.

NOTE: Local conditions, severity of operation or duty cycle may require more or less frequent fluid change intervals that differ from the published recommended fluid change intervals of Allison Transmission. Allison Transmission recommends that customers use fluid analysis as the primary method for determining fluid change intervals. In the absence of a fluid analysis program the fluid change intervals listed in the charts should be used.

MT 600 Filter Change Intervals							
100 Percent Concentration Allison TES 668 and/or TES 295 Approved Fluid(s)*				**Allison TES 389 Approved Fluid(s) ***			
Internal Filter		**Lube/Auxiliary Filter**		**Internal Filter**		**Lube/Auxiliary Filter**	
General**	**Severe*****	**Initial** 5000 Miles (8000 km) 200 Hours		**General****	**Severe*****	**Initial** 5000 Miles (8000 km) 200 Hours	
Overhaul	Overhaul	**General**†**	**Severe***†**	Overhaul	Overhaul	**General**†**	**Severe***†**
		50,000 Miles (80 000 km) 2000 Hours 24 Months	25,000 Miles (40 000 km) 1000 Hours 12 Months			25,000 Miles (40 000 km) 1000 Hours 12 Months	12,000 Miles (20 000 km) 500 Hours 6 Months
See *allisontransmission.com/parts-service/approved-fluids* for a list of Allison Approved transmission fluids.							

* Anything other than 100 percent concentration of Allison TES 668 and/or TES 295 Approved Fluid(s) is considered a mixture and should utilize Allison TES 389 Approved Fluid(s) change intervals.
** General Vocation: less than one (1) stop per mile.
*** Severe Vocation: more than one (1) stop per mile.
† When an Allison recommended high-efficiency filter is used, the change interval is not until the Change Filter light indicates the filter is contaminated or until it has been in use for 3 years, whichever occurs first. No mileage restrictions apply. High-efficiency filters are only approved for use with AT/MT/HT Series.

Copyright © 2023 Allison Transmission, Inc. All Rights Reserved.

Table 27. Recommended Fluid Change Intervals

NOTE: Refer to Table 26 for Filter Change Intervals, Table 28 for Filter and Gasket Kit Information, and Table 29 for Fluid Capacity Information.

NOTE: Change fluid at or before recommended mileage, months, or hours have elapsed, whichever occurs first.

NOTE: Local conditions, severity of operation or duty cycle may require more or less frequent fluid change intervals that differ from the published recommended fluid change intervals of Allison Transmission. Allison Transmission recommends that customers use fluid analysis as the primary method for determining fluid change intervals. In the absence of a fluid analysis program the fluid change intervals listed in the charts should be used.

MT 600 Fluid Change Intervals			
100 Percent Concentration Allison TES 668 and/or TES 295* Approved Fluid(s)		Allison TES 389 Approved Fluid(s) *	
General**	Severe***	General**	Severe***
100,000 Miles (160 000 km) 4000 Hours 48 Months	50,000 Miles (80 000 km) 2000 Hours 24 Months	25,000 Miles (40 000 km) 1000 Hours 12 Months	12,000 Miles (20 000 km) 500 Hours 6 Months
See *allisontransmission.com/parts-service/approved-fluids* for a list of Allison Approved transmission fluids.			
* Anything other than 100 percent concentration of Allison TES 668 and/or TES 295 Approved Fluid(s) is considered a mixture and should utilize Allison TES 389 Approved Fluid(s) change intervals. ** General Vocation: less than one (1) stop per mile. ***Severe Vocation: more than one (1) stop per mile.			

Table 28. Filter and Gasket Kit

NOTE: See the latest revision of SIL 4-TR-01 for additional information.

MT 600 Filter and Gasket Kit
Oil Filter and Gasket Kit Part Number
29538489

Table 29. Fluid Capacity

MT 600 Capacities (Approximate) *	
Pan Depth	Initial Fill**
	Liters (Quarts)
110 mm (4.3 inch) oil pan	11 (12)
130 mm (5.1 inch) oil pan	14 (15)
* Fluid fill capacity is dependent on vehicle configuration. Final fluid capacity must be determined by dipstick level (see Mechanic's Tips MT1357EN Section 1 or your Operator's Manual under "Care and Maintenance" ** Approximate quantities, do not include external lines and cooler hose	

Copyright © 2023 Allison Transmission, Inc. All Rights Reserved.

Appendix H. HT 700 Series Filter Change/Fluid Change Intervals

Table 30. Recommended Filter Change Intervals

NOTE: Refer to Table 31 for Fluid Change Intervals, Table 32 for Filter and Gasket Kit Information, and Table 33 for Fluid Capacity Information.

NOTE: Change filters at or before recommended mileage, months, or hours have elapsed, whichever occurs first.

HT 700 Filter Change Intervals									
100 Percent Concentration Allison TES 668 and/or TES 295 Approved Fluid(s)*					**AllisonTES 389 Approved Fluid(s)***				
Main Filter		**Internal Filter**	**Lube/Auxiliary Filter**		**Main Filter**		**Internal Filter**	**Lube/Auxiliary Filter**	
General**	**Severe*****	Overhaul	**Initial** 5000 Miles (8000 km) 200 Hours		**General****	**Severe*****	Overhaul	**Initial** 5000 Miles (8000 km) 200 Hours	
50,000 Miles (80 000 km) 2000 Hours 24 Months	25,000 Miles (40 000 km) 1000 Hours 12 Months		**General**†**	**Severe***†**	25,000 Miles (40 000 km) 1000 Hours 12 Months	12,000 Miles (20 000 km) 500 Hours 6 Months		**General**†**	**Severe***†**
			50,000 Miles (80 000 km) 2000 Hours 24 Months	25,000 Miles (40 000 km) 1000 Hours 12 Months				25,000 Miles (40 000 km) 1000 Hours 12 Months	12,000 Miles (20 000 km) 500 Hours 6 Months
See *allisontransmission.com/parts-service/approved-fluids* for a list of Allison Approved transmission fluids.									

* Anything other than 100 percent concentration of Allison TES 668 and/or TES 295 Approved Fluid(s) is considered a mixture and should utilize Allison TES 389 Approved Fluid(s) change intervals.
** General Vocation: less than one (1) stop per mile.
*** Severe Vocation: more than one (1) stop per mile.
† When an Allison recommended high-efficiency filter is used, the change interval is not until the Change Filter light indicates the filter is contaminated or until it has been in use for 3 years, whichever occurs first. No mileage restrictions apply. High-efficiency filters are only approved for use with AT/MT/HT Series.

Copyright © 2023 Allison Transmission, Inc. All Rights Reserved.

Table 31. Recommended Fluid Change Intervals

NOTE: Refer to Table 30 for Filter Change Intervals, Table 32 for Filter and Gasket Kit Information, and Table 33 for Fluid Capacity Information.

NOTE: Change fluid at or before recommended mileage, months, or hours have elapsed, whichever occurs first.

NOTE: Local conditions, severity of operation or duty cycle may require more or less frequent fluid change intervals that differ from the published recommended fluid change intervals of Allison Transmission. Allison Transmission recommends that customers use fluid analysis as the primary method for determining fluid change intervals. In the absence of a fluid analysis program the fluid change intervals listed in the charts should be used.

HT 700 Fluid Change Intervals			
100 Percent Concentration Allison TES 668 and/or TES 295 Approved Fluid(s)*		Allison TES 389 Approved Fluid(s)*	
General**	Severe***	General**	Severe***
100,000 Miles (160 000 km) 4000 Hours 48 Months	50,000 Miles (80 000 km) 2000 Hours 24 Months	25,000 Miles (40 000 km) 1000 Hours 12 Months	12,000 Miles (20 000 km) 500 Hours 6 Months
See *allisontransmission.com/parts-service/approved-fluids* for a list of Allison Approved transmission fluids.			
* Anything other than 100 percent concentration of Allison TES 668 and/or TES 295 Approved Fluid(s) is considered a mixture and should utilize Allison TES 389 Approved Fluid(s) change intervals. ** General Vocation: less than one (1) stop per mile. *** Severe Vocation: more than one (1) stop per mile.			

Table 32. Filter and Gasket Kit

HT 700 Filter and Gasket Kits	
Pan	Filter and Gasket Kit Part Number
114 mm (4.5 inch) Oil Pan	29530562
114 mm (4.5 inch) Oil Pan (With adapter 23016883 and pan 23016884)	29530563
152 mm (6 inch) Oil Pan	6839945
178 mm (7 inch) Oil Pan	29530564
216 mm (8.5 inch) Hydraulic Oil Pan	23012407
216 mm (8.5 inch) Electronic Oil Pan	29530565

Copyright © 2023 Allison Transmission, Inc. All Rights Reserved.

Table 33. Fluid Capacities

HT 700 Fluid Capacities (Approximate)*	
Pan Depth	Refill**
	Liters (Quarts)
114 mm (4.5 inch) oil pan	32 (34)
152 mm (6 inch) oil pan	28.5 (30)
178 mm (7 inch) oil pan	31 (33)
216 mm (8.5 inch) oil pan	40.5 (42.8)

* Fluid fill capacity is dependent on vehicle configuration. Final fluid capacity must be determined by dipstick level (see Mechanic's Tips MT1366EN (Hydraulic Controls) or MT1958EN (Electronics Controls) Section 1 or your Operator's Manual under "Care and Maintenance"
** Approximate quantities, do not include external lines, and cooler hose

Copyright © 2023 Allison Transmission, Inc. All Rights Reserved.